THE TEK 11000 SERIES

MEASUREMENT SYSTEMS

Tektronix®
COMMITTED TO EXCELLENCE

11A72

TEK **Service Reference**

Part No. 070-7257-00
Product Group 47

THE 11A72 TWO-CHANNEL AMPLIFIER

WARNING

The following servicing instructions are for use by qualified personnel only. To avoid personal injury, do not perform any servicing unless you are qualified to do so. Refer to the Safety Summary prior to performing any service.

Please check for CHANGE INFORMATION at the rear of this manual.

Tektronix®
COMMITTED TO EXCELLENCE

Instrument Serial Numbers

Each instrument manufactured by Tektronix has a serial number on a panel insert, tag, or stamped on the chassis. The first letter in the serial number designates the country of manufacture. The last five digits of the serial number are assigned sequentially and are unique to each instrument. Those manufactured in the United States have six unique digits. The country of manufacture is identified as follows:

B010000	Tektronix, Inc., Beaverton, Oregon, USA
G100000	Tektronix Guernsey, Ltd., Channel Islands
E200000	Tektronix United Kingdom, Ltd., London
J300000	Sony/Tektronix, Japan
H700000	Tektronix Holland, NV, Heerenveen, The Netherlands

Instruments manufactured for Tektronix by external vendors outside the United States are assigned a two digit alpha code to identify the country of manufacture (e.g., JP for Japan, HK for Hong Kong, etc.).

Tektronix, Inc., P.O. Box 500, Beaverton, OR 97077

Copyright © Tektronix, Inc., 1989. All rights reserved. Tektronix products are covered by U.S. and foreign patents, issued and pending. The following are registered trademarks:
TEKTRONIX, INC., SCOPEMOBILE and

TEKPROBE® is a registered trademark of Tektronix, Inc.

First Printing JAN 1989
Revised AUG 1989

Printed in U.S.A.

Contents

Section 1 General Information

Safety Summary 1-2
Terms in Manuals 1-2
Terms on Equipment 1-2
Symbols in Manuals 1-2
Symbols on Equipment 1-2
Power Source 1-2
Grounding the Product 1-2
Danger Arising from Loss of Ground 1-3
Do Not Operate in Explosive Atmospheres 1-3
Do Not Service Alone 1-3
Use Care When Servicing with Power On 1-3
System Bandwidth 1-3
Installing and Removing an Amplifier 1-3
Instrument Options 1-5
Packaging for Shipment 1-5
Operating Environment 1-6

Section 2 Checks and Adjustments

Using These Procedures 2-5
Conventions in this Manual 2-5
Initialized and Stored Settings 2-6
Menu Selections and Measurement Techniques 2-6
Part 1 Power-On 2-7
Setup to Power-On 2-7
Procedure to Power-On 2-7
Part 2 Enhanced Accuracy 2-8
Setup to Achieve Enhanced Accuracy 2-8
Procedure to Achieve Enhanced Accuracy 2-8
Part 3 Oscilloscope Characterization 2-10
Setup to Characterize the Oscilloscope 2-10
Procedure to Characterize the Oscilloscope 2-10
Part 4 Input Voltage and Input Impedance 2-12
Measurement Limits 2-12
Setup to Examine Input Voltage and Input Impedance 2-12
Procedure to Examine Input Voltage and Input Impedance 2-12
Part 5 Low Frequency Compensation 2-14
Measurement Limit 2-14
Setup to Examine/Adjust the Low Frequency Compensation 2-14
Procedure to Examine/Adjust the Low Frequency Compensation 2-14
Part 6 Step Response 2-16
Measurement Limits 2-16
Standard Setup to Examine/Adjust Step Response 2-17
Procedure to Calibrate a Sampling Head 2-17
Standard Procedure to Examine/Adjust Step Response 2-18
Alternative Setup to Examine/Adjust Step Response 2-21
Alternative Procedure to Examine/Adjust Step Response 2-21

Section 2 Checks and Adjustments (cont)

Part 7 Bandwidth 2-25
Specifications 2-25
Setup to Characterize Oscilloscope Bandwidth 2-25
Procedure to Characterize Oscilloscope Bandwidth 2-25
Setup to Check Bandwidth 2-26
Procedure to Check Bandwidth 2-27
Part 8 DV DC Accuracy 2-29
Specifications 2-29
Setup to Check DV DC Accuracy 2-29
Procedure to Check DV DC Accuracy 2-30
Part 9 DC Offset Accuracy 2-32
Specifications 2-32
Setup to Check DC Offset Accuracy 2-32
Procedure to Check DC Offset Accuracy 2-32
Part 10 DC Balance 2-35
Specification 2-35
Setup to Check DC Balance 2-35
Procedure to Check DC Balance 2-35

Section 3 Maintenance

Preventive Maintenance 3-1
Amplifier Shield Removal 3-1
Cleaning 3-1
Visual Inspection 3-2
Periodic Electrical Adjustment 3-2
Corrective Maintenance 3-3
Ordering Parts 3-3
Static-Sensitive Device Classification 3-3
Removing/Replacing FRUs 3-4
Removing/Replacing an Attenuator 3-7
Removing/Replacing the BNC Connector Assembly 3-9
Removing/Replacing the Front Panel 3-11
Removing/Replacing the Heat Sink 3-12
Removing/Replacing the A1 Main Board 3-14
Removing/Replacing the A2 Front Panel Board 3-17
Removing/Replacing FRU ICs 3-17
Removing/Replacing the U350 Hypcon Assembly 3-19
Programming the Unit Identification 3-23
Multi-Pin Connectors 3-24

Section 3 Maintenance (cont)

Diagnostic Troubleshooting 3-25
Diagnostics Overview 3-25
Calibrating a New Configuration 3-28
Restoring Calibration Data 3-28
Memory Backup Power for the Amplifier 3-29
Field Replaceable Unit (FRU) Guide 3-29
Fuse Troubleshooting 3-32
Jumpers 3-32

Section 4 Theory of Operation

System Functional Overview 4-1
Attenuator Assembly Block 4-1
Input Protection Block 4-1
Delay Lines and Compensation Block 4-2
Amplifier Block 4-2
Front Panel Control Block 4-2
Kernel Block 4-2
Manual Adjustments Block 4-2
Typical Signal Processing Cycle 4-3
Detailed Block Diagram Descriptions 4-4
Attenuators 4-4
A1 Main Board 4-5
A2 Front Panel Board 4-6

Section 5 Replaceable Parts

Parts Ordering Information 5-1
Module Replacement 5-1
Using the Replaceable Parts List 5-2
Item Names 5-2
Indentation System 5-2
Abbreviations 5-2

List of Illustrations

Figure 1-1 Installing the 11A72 Amplifier in an Oscilloscope 1-4
Figure 2-1 Low-Frequency Compensation Adjustment Locations 2-15
Figure 2-2 High Frequency Adjustment Locations 2-24
Figure 3-1 FRU and FRU IC Locator 3-6
Figure 3-2 Removing/Replacing an Attenuator 3-7
Figure 3-3 Removing/Replacing the BNC Connector Assembly and the A2 Front Panel Board 3-10
Figure 3-4 Removing/Replacing the Front Panel 3-11
Figure 3-5 Removing/Replacing the Heat Sink 3-13
Figure 3-6 Removing/Replacing the A1 Main Board 3-15
Figure 3-7 Torx Screw and Nut Block Orientation 3-16
Figure 3-8 Semiconductor Indexing Diagram 3-18
Figure 3-9 Removing/Replacing the Hypcon Assembly 3-21
Figure 3-10 IC Insertion-Extraction Pliers 3-22
Figure 3-11 Multi-Pin Connector Orientation 3-24
Figure 3-12 Sample LED Fault Code Timing Diagram 3-26
Figure 4-1 11A72 Amplifier System Functional Block Diagram 4-1
Figure 4-2 11A72 Amplifier Detailed Block Diagram 4-4

List of Tables

Table 2-1	Measurement Limits, Specifications, and Adjustments	2-1
Table 2-2	Test Equipment	2-2
Table 2-3	Oscilloscope Symbols	2-6
Table 2-4	11A72 Amplifier Bandwidth	2-28
Table 2-5	11A72 Amplifier DC Offset Accuracy	2-34
Table 3-1	Relative Susceptibility to Damage from Static Discharge	3-4
Table 3-2	FRU Removal/Replacement Figure Cross Reference	3-5
Table 3-3	Board FRUs	3-30
Table 3-4	Component/Module FRUs	3-30
Table 3-5	Amplifier Kernel Error Index Codes	3-30
Table 3-6	Self-Tests/Extended Diagnostics Error Index Codes	3-31
Table 3-7	Enhanced Accuracy Error Index Codes	3-31

General Information

This manual is designed for use by qualified service personnel. It contains information necessary to check, maintain and troubleshoot the 11A72 Two-Channel Amplifier.

Troubleshooting is primarily based upon internal diagnostics. These diagnostics isolate problems to the field replaceable unit (FRU) level. Once the faulty FRU is identified, use the procedures in this manual to remove and replace the faulty FRU. Section 5, Replaceable Parts gives a complete list of the FRUs in this amplifier.

The 11A72 is a two-channel, wide-bandwidth, amplifier that plugs into any of the 11000-Series oscilloscopes that use amplifiers. Commands from the oscilloscope control all the functions of the amplifier. The front panel of the amplifier has a button and a LED indicator for each input channel. Other controls and status indicators are located on the oscilloscope.

The impedance of each channel is 50 Ω. Each channel provides a display and a trigger output to the oscilloscope. Each output is comprised of a combination of the input signals that the oscilloscope specifies.

Each channel has a TEKPROBE® input connector. The TEKPROBE® input connector is compatible with a Level 1 or Level 2 TEKPROBE®, a probe with a BNC connector, or a BNC connector. When a probe is connected to the input connector, the amplifier will detect the probe-encoding information, and use this information to automatically achieve the appropriate settings.

Safety Summary

This general safety information is directed to operators and service personnel. Specific warnings and cautions will be found throughout the manual where they apply, but may not appear in this summary.

Terms in Manuals

CAUTION statements in manuals identify conditions or practices that could result in damage to the equipment or other property.

WARNING statements in manuals identify conditions or practices that could result in personal injury or loss of life.

Terms on Equipment

CAUTION on equipment means a personal injury hazard not immediately accessible as one reads the marking, or a hazard to property; including the equipment itself.

DANGER on equipment means a personal injury hazard immediately accessible as one reads the marking.

Symbols in Manuals

Static Sensitive Devices

Symbols on Equipment

DANGER
High Voltage

Protective ground (earth) terminal

ATTENTION
Refer to manual

Power Source

This amplifier is intended to operate in a oscilloscope connected to a power source that will not apply more than 250 V rms between the supply conductors or between either supply conductor and ground. A protective ground connection, by way of the grounding conductor in the oscilloscope power cord, is essential for safe system operation.

Grounding the Product

This amplifier is grounded through the grounding conductor of the oscilloscope power cord. To avoid electric shock, plug the oscilloscope power cord into a properly wired receptacle before connecting the oscilloscope to the input or output terminals of the amplifier. A protective-ground connection, by way of the grounding conductor in the oscilloscope power cord, is essential for safe operation.

Danger Arising from Loss of Ground

Upon loss of the protective-ground connection, all accessible conductive parts (including knobs and controls that may appear to be insulating), can render an electric shock.

Do Not Operate in Explosive Atmospheres

To avoid explosion, do not operate this product in an atmosphere of explosive gasses.

Do Not Service Alone

Do not perform internal service or adjustment of this product unless another person capable of rendering first aid and resuscitation is present.

Use Care When Servicing with Power On

Dangerous voltages exist at several points in this product. To avoid personal injury, do not touch exposed connections and components while the power is on.

Disconnect the power before removing protective panels, or replacing components.

System Bandwidth

The system bandwidth depends on the oscilloscope you are using with this amplifier. Details about bandwidth are included in Part 4, Specification, of the *11A72 Two-Channel Amplifier User Reference* manual, and in the Tektronix Corporate Catalog. (The Tektronix Corporate Catalog also contains complete compatibility information.)

Installing and Removing an Amplifier

Install the amplifier in an 11000-Series Oscilloscope as follows:

1. Set the oscilloscope's ON/STANDBY switch to STANDBY to prevent damage to both the amplifier and the oscilloscope.

CAUTION

If the green indicator light remains on when the STANDBY position is selected, then the switch was internally disabled when the power supply was serviced. To enable the ON/STANDBY switch, refer to the Maintenance section of the Service Reference manual for your oscilloscope.

2. Align the grooves in the top and bottom of the amplifier with the guides in the plug-in compartment of the oscilloscope.
3. Insert the amplifier into the compartment until the front panel of the amplifier is flush with the front panel of the oscilloscope.

Remove the amplifier from a 11000-Series Oscilloscope as follows:

1. Set the oscilloscope's ON/STANDBY switch to STANDBY to prevent damage to both the amplifier and the oscilloscope.
2. Pull the release latch (see Figure 1-1) to disengage the amplifier from the oscilloscope.
3. Pull the amplifier out of the plug-in compartment.

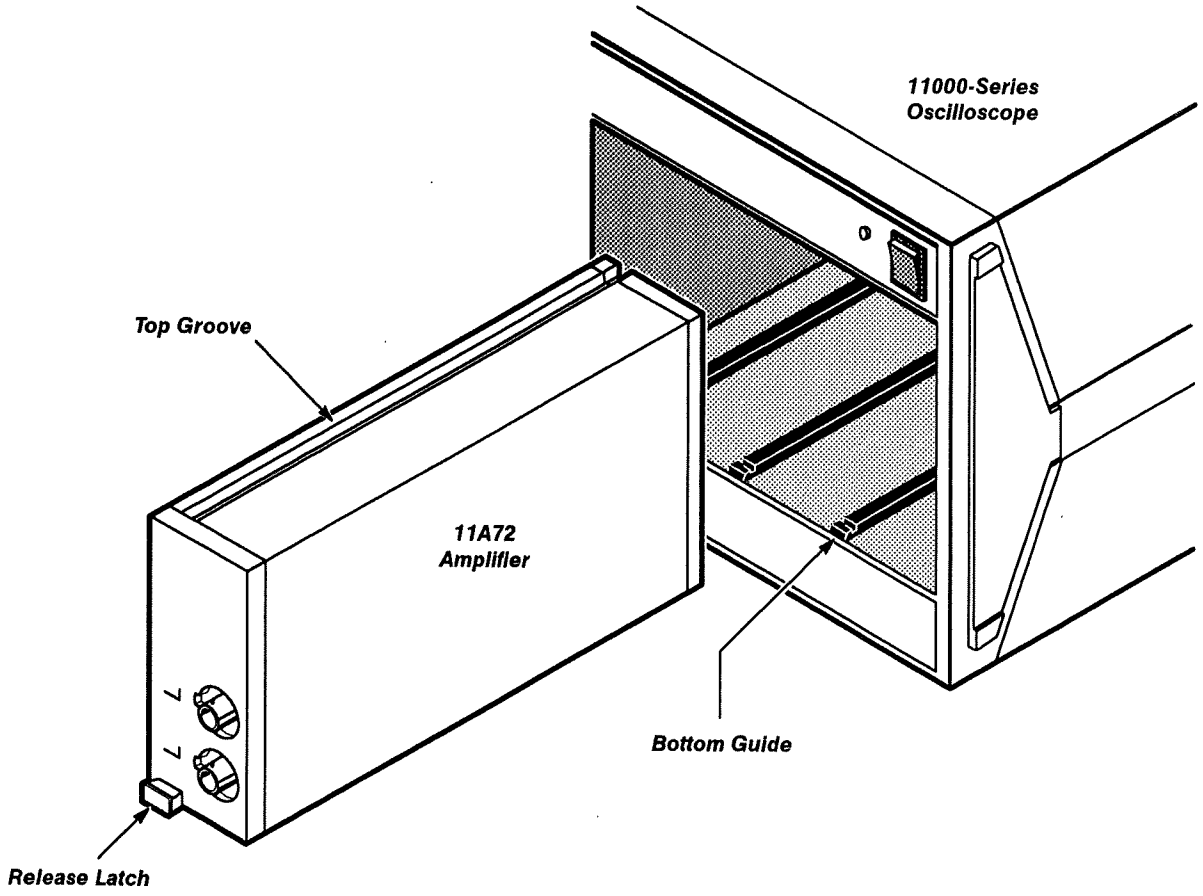

Figure 1-1 *— Installing the 11A72 Amplifier in an Oscilloscope*

Instrument Options

Your amplifier may be equipped with one or more options. A brief description of the available options follow. For further information and prices, see your *Tektronix Products Catalog* or contact your local Tektronix service center.

Option 01 – SMA input connectors

Option 25 – adds two P6231 probes.

Option 26 – adds two P6203 probes.

Option 27 – adds two P6204 probes.

Packaging for Shipment

Save and reuse the original carton and packaging, if possible, when shipping the amplifier by commercial transportation. Package and ship amplifier and oscilloscopes separately.

Attach a tag to the amplifier if you ship it to a Tektronix service center for service or repair. Include the following information on the tag:

- Name and address of the amplifier owner
- Name of a person at your firm who can be contacted about the amplifier
- Complete amplifier type and serial number
- A description of the service required

Package the amplifier as follows, if the original package is not available or is not reuseable:

1. Obtain a corrugated cardboard carton with inside dimensions at least six inches (15 cm) greater than the amplifier dimensions. Use a carton with a bursting test strength of at least 200 pounds per square-inch.
2. Fully wrap the amplifier with anti-static sheeting, or its equivalent, to protect the finish.
3. Tightly pack dunnage or urethane foam between the carton and the amplifier to cushion the amplifier on all sides. (Allow three inches of packing on each side.)
4. Seal the carton with shipping tape or with industrial staples.
5. Mark the address of the Tektronix service center and your return address on the carton in one or more prominent places.

Operating Environment

The following environmental requirements are provided so that you can ensure proper functioning and extend the operation of the amplifier:

- Operate the amplifier in an oscilloscope where the ambient air temperature is between 0° and +50°C.
- Store the amplifier in ambient temperatures from −40° to +75°C.
- After storing the amplifier at temperatures outside the operating limits, allow the amplifier to reach the safe operating temperature before installing it in the oscilloscope, and applying power to the oscilloscope.

Enhanced system accuracy is available after a 20-minute warmup period. If the oscilloscope is in the Enhanced Accuracy state and the internal temperature of the oscilloscope changes ±5°C, the oscilloscope reverts to normal accuracy.

Checks and Adjustments

This section contains procedures to examine measurement limits, to check electrical specifications, and to manually set all internal adjustments. This procedure provides a logical sequence of check and adjustment steps, and is intended to return the plug-in to specified operation following repair, or as part of a routine maintenance program. To functionally test the oscilloscope, perform the parts which a yes indication in the Functional Test column of Table 2-1, Measurement Limits, Specifications, Adjustments, and Functional Test.

Refer to the *11A72 Two-Channel Amplifier User Reference Supplement* manual for more information about specifications. Refer to Table 2-2, Test Equipment, for information regarding test equipment used in the setup figures at the beginning of each part.

Table 2-1 *— Measurement Limits, Specifications, Adjustments and Functional Test*

Part and Description	Measurement Limits *(Examine)*	Specifications *(Check)*	Adjustments *(Adjust)*	Functional Test
Part 1 Power-On	none	none	none	yes
Part 2 Enhanced Accuracy	none	none	none	yes
Part 3 Oscilloscope Characterization	none	none	none	yes
Part 4 Input Voltage and Input Impedance	input voltage ±0.5 mV input impedance of 50 Ω ±0.25 Ω	none	none	yes
Part 5 Low Frequency Compensation	aberrations <0.25% of the step amplitude		CH1 VTHERM and CH2 VTHERM for flattest trace	yes
Part 6 Step Response	the first overshoot and first undershoot of the Display high-frequency aberrations must be of equal magnitude		CH1 HF1, CH1 HF2, CH1 HF3, CH1 DISP HF, and CH2 HF1, CH2 HF2, CH2 HF3, CH2 DISP HF so that the first overhsoot and undershoot are of equal magnitude	no
	Display and Trigger waveform matching within 3%		RCAL 70 and RCAL 198 for 3% match between the Display and Trigger signals	

Table 2-1 — Measurement Limits, Specifications, and Adjustments (cont)

Part and Description	Measurement Limits *(Examine)*	Specifications *(Check)*	Adjustments *(Adjust)*	Functional Test
Part 7 Bandwidth		at 1000 MHz the amplitude must be ≥86.3% of the reference amplitude	none	yes
		at 500 MHz the amplitude must be ≥92.5% of the reference amplitude	none	yes
Part 8 ΔV DC Accuracy		using an 11400-Series Oscilloscope; ±0.60% +0.01 div	none	yes
		using an 11300-Series Oscilloscope; ±0.80% +0.03 div	none	yes
Part 9 DC Offset Accuracy		offset within ± (0.40% +0.1 div) of the vertical offset setting (refer to Table 2-5 for specific offset error and vertical offset settings)	none	yes
Part 10 DC Balance		balance within ±0.1 division	none	yes

Table 2-2, Test Equipment, lists recommended test equipment for use in this manual. The Functional Test column of Table 2-2 indicates, with a check mark (✓), the test equipment that is recommended if you are only performing a functional test. Procedure steps are based on the test equipment examples given, but other equipment with similar specifications may be substituted. Test results, setup information, and related connectors and adapters may be altered if you use different equipment.

Part 4 requires an 11400-Series oscilloscope. Parts 5 and 6 require an 11000-series amplifier oscilloscope with a 1 GHz system bandwidth capability. Therefore, an 11400-Series Oscilloscopes with a 1 GHz system bandwidth capability is recommended if you intend on performing all the parts in this section.

Table 2-2 — *Test Equipment*

Description	Minimum Specification	Examples of Recommended Test Equipment	Functional Test
11000-Series Oscilloscope that accommodates amplifiers	Tektronix oscilloscope that accommodates amplifiers	TEKTRONIX 11301 Programmable Oscilloscope 11302 Programmable Oscilloscope 11301A Counter Timer Oscilloscope 11302A Counter Timer Oscilloscope 11401 Digitizing Oscilloscope 11402 Digitizing Oscilloscope	✓
11800-Series Sampling Equipment (Standard)	11800-Series Oscilloscope	TEKTRONIX 11801 Digital Sampling Oscilloscope 11802 Digital Sampling Oscilloscope	
	Sampling Heads (2 required)	TEKTRONIX SD-24 TDR/Sampling Head TEKTRONIX SD-26 Sampling Head	
	Sampling Head Extenders (2 required)	TEKTRONIX 012-1220-00 Sampling Head Extender	
	RF cable, 12-inch SMA connectors	Tektronix Part 174-1364-00	
7000-Series Sampling Equipment (Alternative)	7854 Oscilloscope	TEKTRONIX 7854 Waveform Processing Oscilloscope	
	7S12 TDR/Sampler	TEKTRONIX 7S12 TDR/Sampler	
	7S11 Sampling Unit	TEKTRONIX 7S11 Sampling Unit	
	S-6 Sampling Heads (2 required)	TEKTRONIX S-6 Sampling Head	
	S-52 Pulse Generator Head	TEKTRONIX S-52 Pulse Generator Head	
Flexible Plug-in Extender		TEKTRONIX 067-1261-00 Flexible Plug-in Extender	
Signal Pickoff	Provides output signal access	TEKTRONIX 067-1262-00 Signal Pickoff	
Terminal	Any terminal with an RS-232-C serial port	TEKTRONIX 4205 Color Graphics Terminal	
High Frequency Sine Wave Generator	250 MHz to 1000 MHz, leveled variable amplitude, 50 kHz or 6 MHz reference	TEKTRONIX SG 504 Leveled Sine Wave Generator with a TM 500-Series Power Module	✓

Table 2-2 — Test Equipment (cont)

Description	Minimum Specification	Examples of Recommended Test Equipment	Functional Test
Signal Standardizer	Tektronix Calibration Fixture with interface connector modified for 11000-Series use	TEKTRONIX 067-0587-02 Signal Standardizer	✓
Calibration Generator	Period, 0.1 ms - 10 ms, variable amplitude to 100 V peak-to-peak, rise time, <1 ns aberrations after 1 μs <0.1%	TEKTRONIX PG 506 Calibration Generator with a TM 500-Series Power Module	✓
Power Supply	Continuously variable from 0–40 V; current limit adjustable from 0–400 mA	TEKTRONIX PS 503A Dual Power Supply with a TM 500-Series Power Module	✓
DC Voltage Calibrator	Output, 0–4 V	Data Precision 8200	✓
Digital Multimeter (w/test leads)	Accuracy ≤0.01%	Fluke 8842A Digital Multimeter	✓
Serial Cable	RS-232-C Cable	Tektronix Part 012-0911-00	✓
Tunnel Diode Pulser	Aberrations <1% in a 1 GHz system	Tektronix Part 067-0681-01	✓
Coaxial Cable, 18″	50 Ω, 18-inch male BNC connectors	Tektronix Part 012-0076-00	✓
Coaxial Cable, 36″	50 Ω, 36-inch, male BNC connectors	Tektronix Part 012-0482-00	✓
Adapters	BNC female-to-alligator clip	Tektronix Part 013-0076-00	✓
	BNC female-to-dual banana (2 required)	Tektronix Part 103-0090-00	✓
	Coaxial pin receptacle (4 required)	Tektronix Part 103-0169-00	
	SMA male-to-coaxial pin (4 required)	Tektronix Part 175-7420-00	
	SMA male-to-BNC female	Tektronix Part 015-1018-00	
	SMA female-to-BNC male	Tektronix Part 013-0126-00	
Connector, T	BNC, T: two female and one male BNC connector	Tektronix Part 103-0030-00	✓

Table 2-2 — Test Equipment (cont)

Description	Minimum Specification	Examples of Recommended Test Equipment	Functional Test
Resistor	430 Ω; tolerance, 10%; power rating, 1 W	Tektronix Part 303-0431-00	✓
Termination, 50 Ω (2 required)	Impedance 50 Ω SMA connectors	Tektronix Part 015-1020-00	
Attenuator, 2X	6 dB attenuation, 50 Ω, one male and one female BNC connector	Tektronix Part 011-0069-02	✓
Attenuator, 5X	14 dB attenuation, 50 Ω, one male and one female BNC connector	Tektronix Part 011-0060-02	✓
Alignment Tool (insulated slot)	Insulated slot	Tektronix Part 003-0675-01	
Magnetic Screwdriver	Holder for Torx tips	Tektronix Part 003-0293-00	
Torx Screwdriver Tips	#6 tip #7 tip #8 tip #9 tip #10 tip (narrow shank) #15 tip	Tektronix Part 003-1415-00 003-1293-00 003-0964-00 003-0814-00 003-0815-00 003-0966-00	
Integrated Circuit Extracting Tools	IC insertion-extraction pliers, 28-pin type	General Tool P/N U505BG or equivalent	
24-pin Socket		Tektronix Part 136-0751-00	
Needle-nose pliers			
Tweezers			
Static Control Mat		Tektronix Part 006-3414-00	
Wrist Strap		Tektronix Part 006-3415-00	

Using These Procedures

The first-time user should familiarize themselves with the proceeding information prior to performing the procedures in the parts that follow:

Conventions in this Manual

In these procedures, the following conventions are used:

- CAPITAL letters within the body of text identify front panel controls, indicators, and connectors on the oscilloscope (for example, MEASURE) and amplifier.
- **Bold** letters identify menu labels, display messages, and commands typed in from a terminal or controller.
- Initial Capital letters identify connectors, controls, and indicators on associated test equipment (for example, Position).
- In some steps, the first word is italicized to identify a step that contains a performance verification and/or an adjustment instruction. For example, if *Check* is the first word in the title of a step, an electrical specification is checked. If *Adjust* appears in the title, the step involves an electrical adjustment. If *Examine* is the first word in the title, the step involves measurement limits that are used as calibration guides; these limits are not to be interpreted as electrical specifications.
- An instruction that has a symbol in front of it gives specific information on how to execute a function on a particular oscilloscope. An experienced user could by-pass this specific information to perform the parts in this section more expediently.

Table 2-3, Oscilloscope Symbols, lists the symbols used in this manual and the particular oscilloscope to which they pertain.

Table 2-3 *– Oscilloscope Symbols*

Symbol	Oscilloscope Type
▲	11300-Series Oscilloscopes
◆	11400-Series Oscilloscopes

Initialized and Stored Settings

At the beginning of most steps, you are instructed to **Initialize** the oscilloscope as part of the setup. The **Initialize** feature, available through the UTILITY menu, presets all oscilloscope controls and functions to known values. Initializing the oscilloscope at the beginning of a step eliminates the possibility of settings from previous parts causing erroneous or confusing results.

Menu Selections and Measurement Techniques

Details on measurement techniques and instructions for making menu selections are generally not included in this manual. Comprehensive descriptions of menus and oscilloscope features are located in the specific oscilloscope *User Reference* manual.

Part 1 Power-On

Perform all of the parts in this section within the ambient temperature range of +18° and +28°C, to ensure that the oscilloscope and amplifier operate properly.

Setup to Power-On

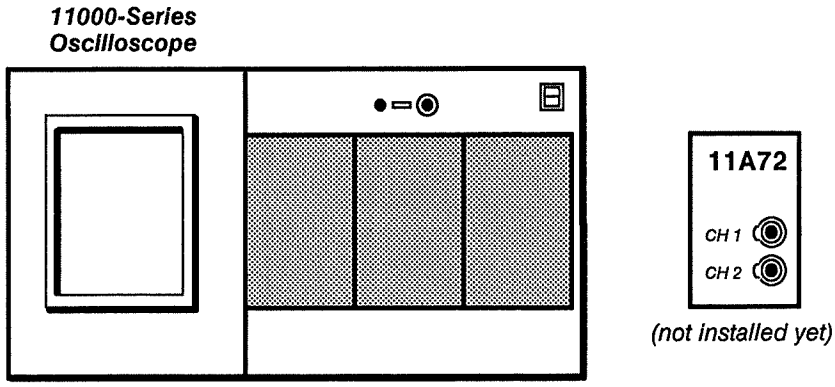

Setup to Power-On

Procedure to Power-On

☐ Step 1: Perform the following settings in the order listed:

11A72 Amplifier ..... not installed yet
11000-Series Oscilloscope
ON/STANDBY switch ..... STANDBY

☐ Step 2: Install the 11A72 Amplifier in the center compartment.

☐ Step 3: Connect the oscilloscope to a suitable power source. Ensure that the oscilloscope's rear panel PRINCIPAL POWER SWITCH is set to OFF.

☐ Step 4: Set the oscilloscope's rear panel PRINCIPAL POWER SWITCH to ON and then the front panel ON/STANDBY switch to ON.

☐ Step 5: Power on the following test equipment so that it warms up with the amplifier to be tested:

- Digital multimeter
- Calibration generator
- High frequency sine wave generator
- Power supply
- 11800-Series sampling equipment or 7000-Series sampling equipment
- Terminal

A complete list of test equipment is listed in Table 2-2, Test Equipment.

Part 2 Enhanced Accuracy

When displayed, the Enhanced Accuracy symbol (**EA**) indicates that the amplifier and oscilloscope are at their highest accuracy state. The amplifier saves the calibration time and the ambient temperature, since this data is used in maintaining the Enhanced Accuracy state.

For more information about the Enhanced Accuracy state, refer to the oscilloscope's *User Reference* manual.

To verify the DC measurement accuracy of the amplifier and oscilloscope system while Enhanced Accuracy is in effect, apply and monitor the test voltages, and then compare these test voltages with the measurements made on the screen.

Setup to Achieve Enhanced Accuracy

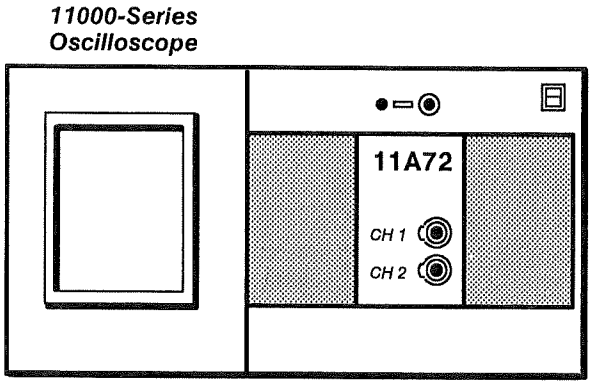

Setup to Achieve Enhanced Accuracy

Procedure to Achieve Enhanced Accuracy

☐ Step 1: **Initialize** the oscilloscope's settings, then perform the following settings in the order listed:

11A72 Amplifier ..... no settings required
11000-Series Oscilloscope ..... no setting changes

☐ Step 2: Twenty minutes after power-on, the oscilloscope must recalibrate itself to achieve the Enhanced Accuracy state. Press the ENHANCED ACCURACY button. A prompt then appears on the display. Press the ENHANCED ACCURACY button again. Enhanced Accuracy is achieved after a couple of minutes.

CAUTION

Turning the oscilloscope's power off during Enhanced Accuracy testing may result in losing some of the non-volatile RAM data. This could cause diagnostic errors at the next power-up, and cause the oscilloscope to operate unpredictably. If this event occurs, refer to Restoring Calibration Data in your oscilloscope's Service Reference manual.

☐ Step 3: Ensure that the message, **Enhanced Accuracy in Progress** (indicating that the oscilloscope is attempting to achieve Enhanced Accuracy) appears.

☐ Step 4: Ensure that the message, **Enhanced Accuracy completed and passed** or **Self calibration completed successfully** (indicating that the Enhanced Accuracy state has been achieved) appears. (The **EA** indicator appears on the display when Enhanced Accuracy is completed.)

Part 3 Oscilloscope Characterization

For Parts 8 and 9, the oscilloscope must be characterized in order to obtain the calibration voltage reference. Prior to performing Parts 8 and 9, perform the following procedure, and then record the calibration voltage reference for use later in these parts. Procedures to characterize both the 11400-Series Oscilloscope and the 11300-Series Oscilloscope are provided below.

Connect all equipment as shown in the setup.

Setup to Characterize the Oscilloscope

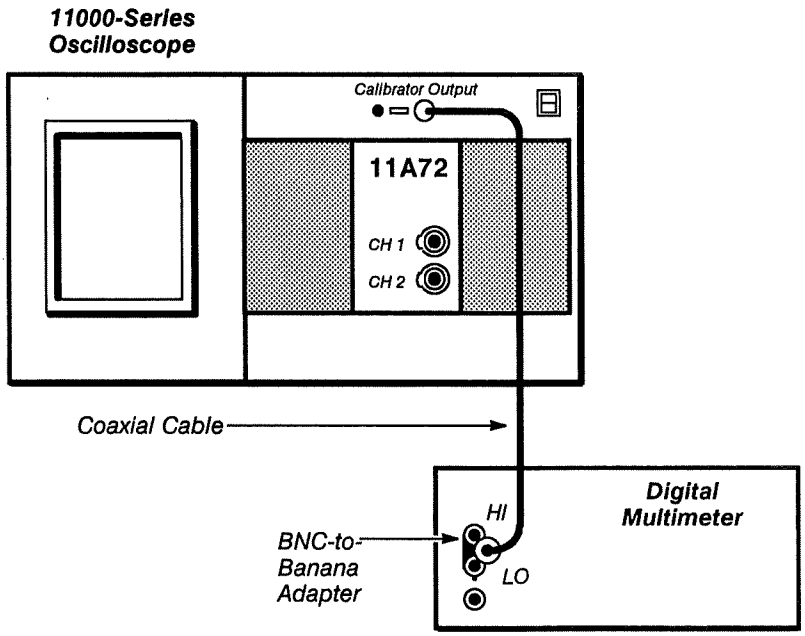

Setup to Characterize the Oscilloscope

Procedure to Characterize the Oscilloscope

You can perform this procedure with the 11A72 Amplifier installed in the following oscilloscopes:

- ◆ 11400-Series Oscilloscope
- ▲ 11300-Series Oscilloscope

Note: *If you are using an 11300-Series Oscilloscope, verify that the firmware is Version V2.4 or higher. You can verify this in the* **Ext Test** *menu. If your oscilloscope's firmware version is lower than V2.4, then you cannot perform this part, and should assume that the characterization factor of the oscilloscope's calibration voltage reference is 1.00.*

☐ Step 1: **Initialize** the oscilloscope settings, then perform the following settings in the order listed:

11A72 Amplifier . . . . . no setting changes

◆ 11400-Series Oscilloscope

UTILITY menu ..... **Extended Diagnostics**
Block ..... **Points Acq**
Area ..... **Cal Refs**
Routine ..... **FP −10.000 V**
Run .....

▲ 11300-Series Oscilloscope

UTILITY button ..... press
Ext Test ..... **Run**
Block ..... **Front Panel**
Area ..... **FP Calibrator**
Routine ..... **−9.9988 V**
Loop ..... **cnt( )**
Run .....

Digital multimeter (DMM)
Mode ..... DC Voltage

☐ Step 2: Record the absolute value reading of the DMM as V_1 for later use.

☐ Step 3: Touch **Exit**.

☐ Step 4: Set the calibrator output in the **Routine** pop-up menu as follows:

◆ Touch **FP + 9.9951 V**.

▲ Touch **Routine**, and then touch **+9.9939V**.

☐ Step 5: Touch **Run**.

☐ Step 6: Record the DMM reading as V_2 for later use.

☐ Step 7: Touch **Exit.**

☐ Step 8: Touch **Exit Diagnostics**.

☐ Step 9: Calculate the characterization factor of the oscilloscope's calibration voltage reference as follows:

◆ Add the absolute values of V_1 and V_2, and then divide the result by 19.9951 V to obtain the characterization factor of the oscilloscope's calibration voltage reference.

▲ Add the absolute values of V_1 and V_2, and then divide the result by 19.9927 to obtain the characterization factor of the oscilloscope's calibration voltage reference.

Note: *This characterization factor just obtained is required to perform Parts 8 and 9.*

Part 4 Input Voltage and Input Impedance

This part shows the setup and lists the procedure to examine the input voltage and input impedance.

The system must be in the Enhanced Accuracy state for this part.

Connect all equipment as shown in the setup.

Measurement Limits

The measurement limits for this part are as follows:

- Open circuit input voltage = 0 ±0.5 mV
- Input impedance = 50 ±0.25 Ω

Setup to Examine Input Voltage and Input Impedance

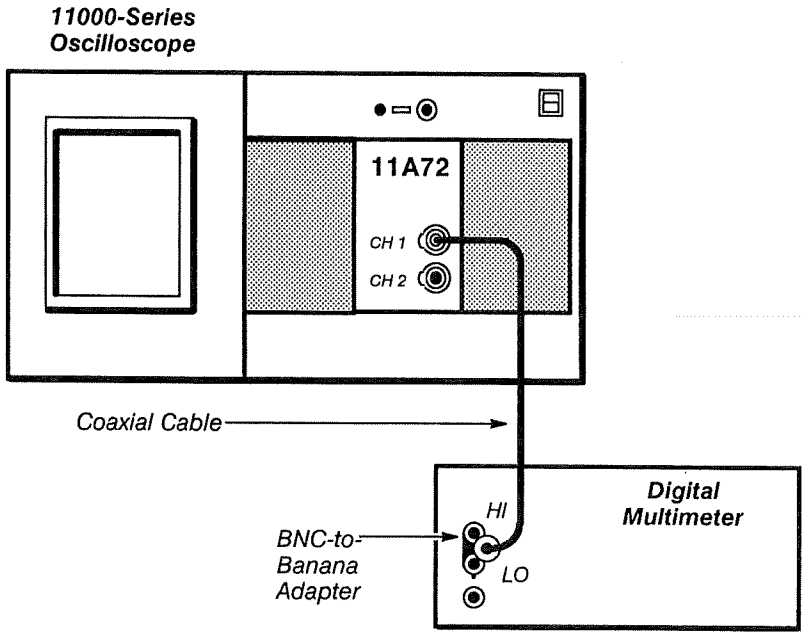

Setup to Examine Input Voltage and Input Impedance

Procedure to Examine Input Voltage and Input Impedance

☐ Step 1: **Initialize** the oscilloscope settings, then perform the following settings in the order listed:

11A72 Amplifier

CH 1 display on/off ..... on

11000-Series Oscilloscope

Vert Size ..... 10 mV/div

Digital multimeter (DMM)

Range ..... 200 mV DC

☐ Step 2: *Examine* the DMM for a reading of 0.0 mV, within the limits of ±0.5 mV.

☐ Step 3: Set the DMM to the 200 Ω range.

☐ Step 4: Read the DMM, and then record the value as Z_1 for later use.

☐ Step 5: Reverse the connection of the BNC-to-dual banana adapter on the DMM.

☐ Step 6: Read the DMM, and then record this value as Z_2 for later use.

☐ Step 7: *Examine* the average of Z_1 and Z_2 for a value of 50.0 Ω, within the limits of 49.75 Ω and 50.25 Ω.

Repeat all of this part for CH 2.

Part 5 Low Frequency Compensation

This part shows the setup and lists the procedures to examine/adjust the low frequency compensation. You can only perform this part with an 11400-Series Oscilloscope.

Since the adjustments in Parts 5 and 6 are interrelated, perform these parts in numerical order.

Connect all equipment as shown in the setup.

Measurement Limit

The low frequency aberrations must be <0.25% of the step amplitude after the first 2 μs from the rising edge of the step.

Setup to Examine/Adjust the Low Frequency Compensation

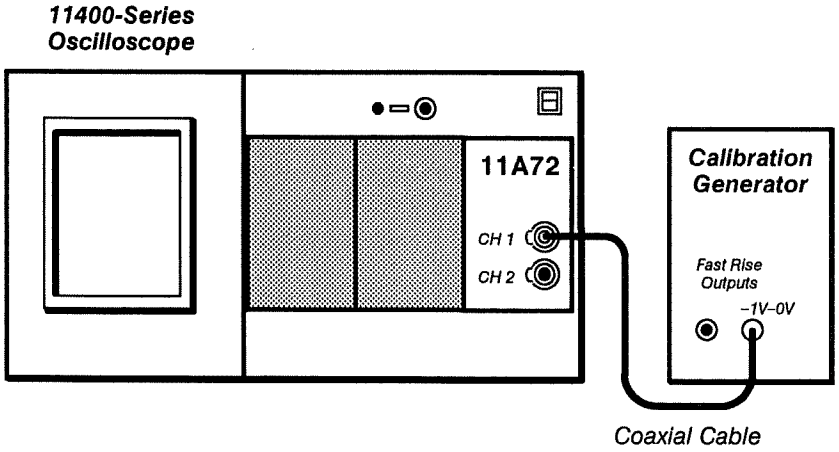

Setup to Examine/Adjust the Low Frequency Compensation

Procedure to Examine/Adjust the Low Frequency Compensation

☐ Step 1: **Initialize** the oscilloscope settings, then perform the following settings in the order listed:

11A72 Amplifier
- CH 1 display on/off ..... on

11400-Series Oscilloscope
- **Vert Size** ..... 10 mV/div

Calibration generator
- Output mode ..... Fast Rise
- Amplitude ..... 100 mV peak-to-peak display
- Period ..... 0.1 ms

11400-Series Oscilloscope

Acquire Desc pop-up menu ..... **Average N** to **On**
..... **Set Avg N** to 4
Vertical Desc ..... touch
***** ..... touch
1 ..... touch
Enter Desc ..... touch
Main Size ..... 5 µs/div

☐ Step 2: Touch the vertical icon, and then set the **Vert Mag** to 1 mV/div.

☐ Step 3: Set the **Vert Pos** so that the trace is on the horizontal centerline.

☐ Step 4: *Examine* that the waveform aberrations are less than 0.25 divisions in height after the first 2 µs from the rising edge of the waveform (0.25% of the step amplitude).

STOP

DO NOT attempt to adjust the low-frequency compensation adjustment CH 1 VTHERM (or CH 2 VTHERM for CH 2) if the waveform is within the stated limits or if you are only performing a functional test. Proceed to Step 6.

☐ Step 5: *Adjust* the low-frequency compensation adjustment CH1 VTHERM (or CH2 VTHERM for CH2) on the A1 Main board for the flatest trace possible after 2 µs from the rising edge of the waveform.

☐ Step 6: Repeat all of this part for CH 2.

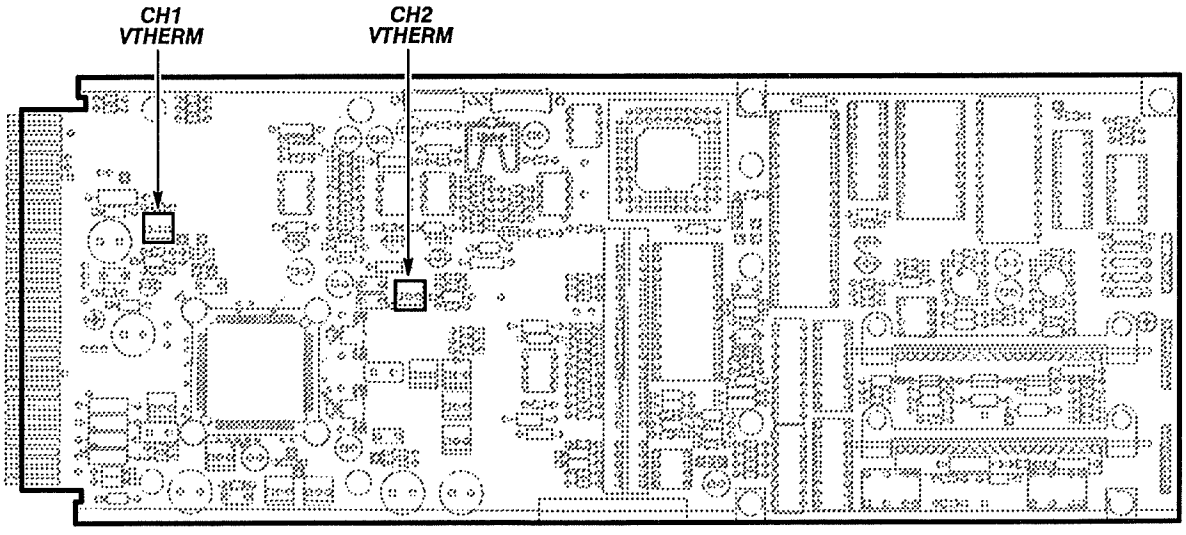

***Figure 2-1** Low-Frequency Compensation Adjustment Locations*

Part 6 Step Response

This part provides a standard and alternative setup and the steps to examine/adjust the trigger step response so that it matches the display step response. The standard procedure requires the use of 11800-Series sampling equipment and the alternative procedure requires the use of 7000-Series sampling equipment. Prior to performing the standard procedure you must perform the Procedure to Calibrate a Sampling Head.

Since the adjustments in Parts 5 and 6 are interrelated, perform these parts in numerical order.

You can perform this part with the 11A72 Amplifier installed in the following oscilloscopes:

- ◆ 11400-Series Oscilloscopes
- ▲ 11300-Series Oscilloscopes

Prior to performing this part, complete these preliminary steps:

- Locate the CAL LOCK jumper pins, J450, on the A6 Time Base board of the 11400-Series Oscilloscope, and install a black short circuit jumper across the pins; or, locate DIP switch 5 on the A11 Main Processor board of the 11300-Series Oscilloscope, and set the switch to the closed position.
- Locate the J850 jumper pins on the 11A72 Amplifier, and install the black short circuit jumper so that it is in the UID position (see Figure 3-1).
- Determine the baud rate of your terminal.
- Set the **Baud Rate** on the 11000-Series oscilloscope to match the baud rate of the terminal you are using as follows:
  - ◆ Press the UTILITY button, and then touch **RS232C Parameters**.
  - ◆ Set the **Baud Rate** to match the baud rate of the terminal you are using.
  - ◆ Set **Echo** and **Verbose** to **On**.
  - ▲ Press the UTILITY button, and then touch **RS232.**
  - ▲ Touch the ▲ icon or the ▼ icon to set the **Baud Rate** to match the baud rate of the terminal you are using.
  - ▲ Type : **e** <cr>
    V <cr>
    on the terminal keyboard (<cr> represents the return or enter key).

Connect all equipment as shown in the setups.

Measurement Limits

The measurement limits for this part are as follows:

- The first overshoot and first undershoot of the Display high-frequency aberrations must be of equal magnitudes.
- The 11A72 Amplifier Display and Trigger signals must match each other within 3% for the first 4 ns after the rising edge.

Standard Setup to Examine/Adjust Step Response

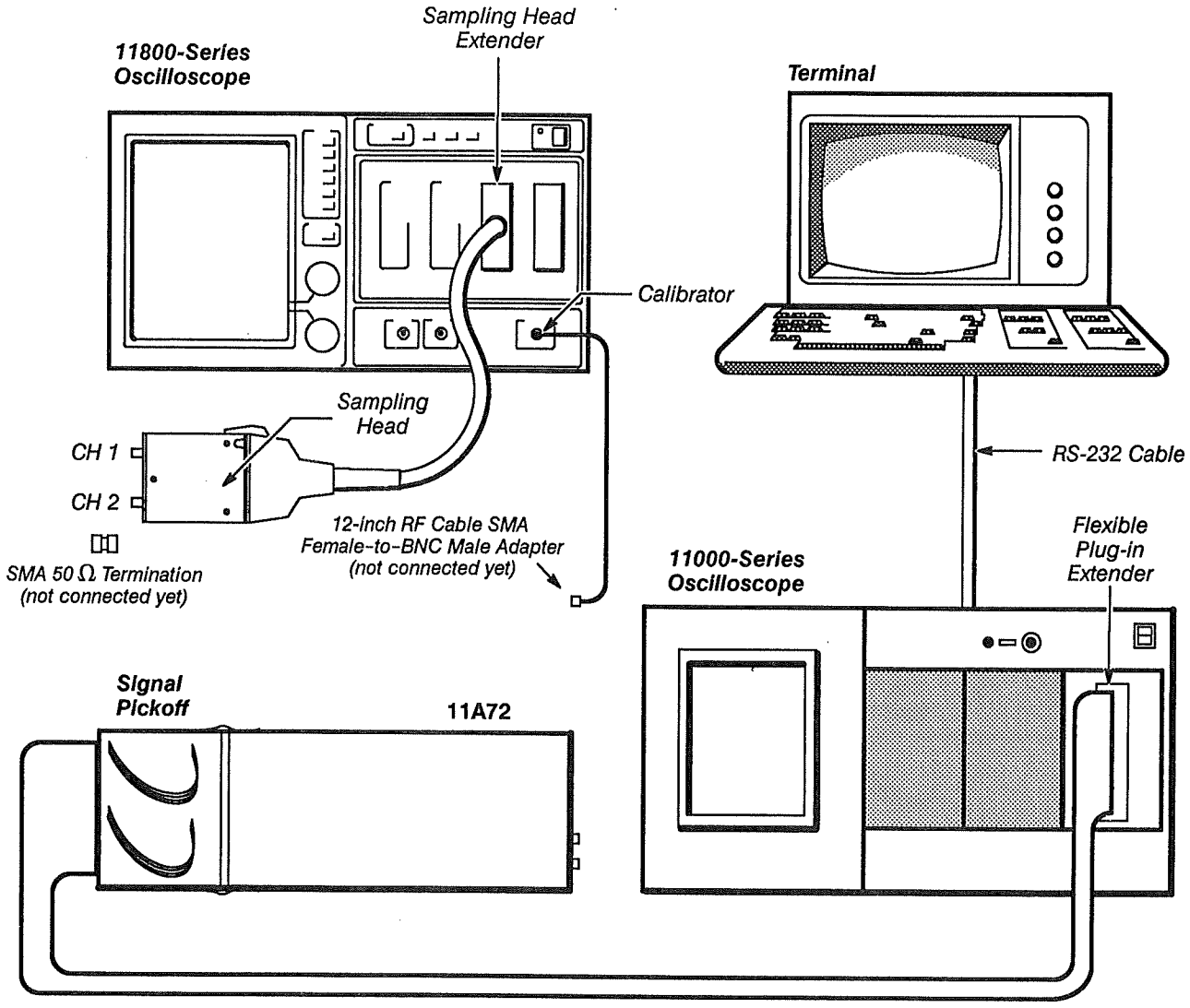

Standard Setup to Examine/Adjust Step Response

Procedure to Calibrate a Sampling Head

☐ Step 1: **Initialize** the oscilloscope settings, then perform the following settings in the order listed:

11800-Series Oscilloscope ..... no settings required
Sampling heads ..... no settings required

☐ Step 2: Press the ENHANCED ACCURACY button.

☐ Step 3: Touch **Loop Gain**.

☐ Step 4: Touch the channel number to be calibrated and then **Automatic Calibrate** in the **Loop Gain Calibration** pop-up menu.

☐ Step 5: Connect the 12-inch RF cable from the CALIBRATOR output to the sampling head input channel to be calibrated.

☐ Step 6: Touch **Proceed** and then **Store Constants** in the **Loop Gain Calibration** pop-up menu.

☐ Step 7: Disconnect the CALIBRATOR from the sampling head input.

☐ Step 8: Touch **Offset Null** in the ENHANCED ACCURACY major menu and then **Automatic Calibrate** in the **Offset Nulling** pop-up menu.

☐ Step 9: Connect a 50 Ω termination to the sampling head input.

☐ Step 10: Touch Proceed and then **Store Constants** in the **Offset Nulling** pop-up menu.

☐ Step 11: Touch **Exit**.

Repeat Steps 3 through 11 for the other sampling head channel.

Once both of the sampling head channels have been calibrated, ensure that the 11800-Series Oscilloscope's ON/STANDBY switch and PRINCIPAL POWER SWITCH remain in the ON position. If the oscilloscope is powered-off before performing this part, then the sampling heads must be recalibrated.

Standard Procedure to Examine/Adjust Step Response

☐ Step 1: **Initialize** the settings for both oscilloscopes shown in the setup, and then perform the following settings in the order listed:

11A72 Amplifier
- CH 1 display on/off ..... on

11000-Series Oscilloscope
- TRIGGER button ..... press
  - Main Trigger Source **R1**
- Vertical Size ..... 50 mV/div

Sampling head ..... no settings required

11800-Series Oscilloscope
- TRIGGER button ..... press
  - **Source** ..... **Internal Clock**
- **Def Tra** ..... touch
  - **Avg(** ..... touch
  - **Mainframe Channel** ..... touch
  - **1** ..... touch
  - **-** ..... touch
  - **Mainframe Channel** ..... touch
  - **2** ..... touch
  - **)** ..... touch
  - ***** ..... touch
  - **1** ..... touch
  - **Enter Desc** ..... touch
- **Vert Mag: Tra** ..... 12.5 mV/div

Vert Pos: Tra ..... 0 V
Chan Sel ..... touch
Vert Size: M1 ..... 50 mV/div
Chan Sel ..... touch
Vert Size: M2 ..... 50 mV/div
Main Size ..... 5 ns/div
Terminal ..... on

Make the following connections from the signal pickoff to the sampling head inputs.

- Signal pickoff cable A11 to CH 1 input
- Signal pickoff cable B11 to CH 2 input

Note: *Signal pickoff cables A11 and B11 are the 11A72 Amplifier's differential display outputs.*

☐ Step 2: Connect the unconnected end of the 12-inch RF Cable to the 11A72 Amplifier's CH 1 input.

☐ Step 3: Set the 11800-Series Oscilloscope's **Main Pos** so that the rising edge of the waveform is at the left-most edge of the screen.

☐ Step 4: Touch the 11800-Series Oscilloscope's vertical icon.

☐ Step 5: Set the **Chan Sel** to **Calcd Tra**.

☐ Step 6: Set the **Vert Pos: Tra** so that the topline of the waveform (25 ns past the rising edge of the step) is at the horizontal centerline of the screen.

☐ Step 7: Touch the horizontal icon, and then set the **Main Size** to 500 ps/div.

☐ Step 8: *Examine* that the first overshoot and the first undershoot of the waveform are equal in magnitude (that is, the peaks of the overshoot and undershoot are equidistant from the horizontal centerline).

DO NOT attempt to adjust the display step response adjustments CH1 HF1, CH1 HF2, CH1 HF3, and CH1 DISP HF (or CH2 HF1, CH2 HF2, CH2 HF3, and CH2 DISP HF for CH2) if the waveform is within the stated limits. Proceed to Step 10.

☐ Step 9: *Adjust* the display step response adjustments CH1 HF1, CH1 HF2, CH1 HF3, and CH1 DISP HF (or CH2 HF1, CH2 HF2, CH2 HF3 and CH2 DISP HF for CH2) so that the first overshoot and the first undershoot are equal in magnitude. (See Figure 2-2 for the location of these adjustments.)

Note: *Typically, adjustments CH1 HF1, CH1 HF2 and CH1 HF3 (or CH2 HF1, CH2 HF2, and CH2 HF3 for CH2) have very little effect on the display step response and can remain at midrange.*

☐ Step 10: Touch the STORE/RECALL button on the 11800-Series Oscilloscope.

☐ Step 11: Touch **Store Trace** in the STORE/RECALL major menu, and then **Store All** in the **Store Trace** pop-up menu.

☐ Step 12: Touch **Recall Trace** in the STORE/RECALL major menu.

☐ Step 13: Touch **STO**X, where X is the largest number in the **Recall Stored Trace** pop-up menu. (The largest number is the last trace that is stored.)

☐ Step 14: Connect signal pickoff connectors A11 and B11 back into their respective connectors on the signal pickoff.

☐ Step 15: Disconnect the A13 signal pickoff connector from the signal pickoff, and then connect it to the CH 1 sampling head connector.

☐ Step 16: Disconnect the B13 Signal pickoff connector from the signal pickoff, and then connect it to the CH 2 sampling head connector.

Note: *Signal pickoff cables A13 and B13 are the 11A72 Amplifier's differential trigger outputs.*

☐ Step 17: *Examine* that the M1-M2 and the **STO**X waveforms (that is, the display and trigger signals) match each other vertically within 3%. (The 11800-Series Oscilloscope's vertical gain is set for 5% per division.)

DO NOT attempt to adjust the trigger step response if the waveforms are within the stated limits. Proceed to Step 19.

☐ Step 18: *Adjust* the trigger step response to achieve the closest match of the two waveforms. Type **RCAL70:**X on the computer keyboard where X is a number between −1.0 and +1.0, and then vary the value of X to achieve the closest match of the waveform is achieved.

Note: *If you are adjusting the CH2 trigger step response, the syntax is* ***RCAL 198:****X.*

☐ Step 19: Repeat the standard procedure to *Examine/Adjust* step response with the 11800-Series Oscilloscope's calibrator connected to the 11A72 Amplifier's CH2 connector.

Alternative Setup to Examine/Adjust Step Response

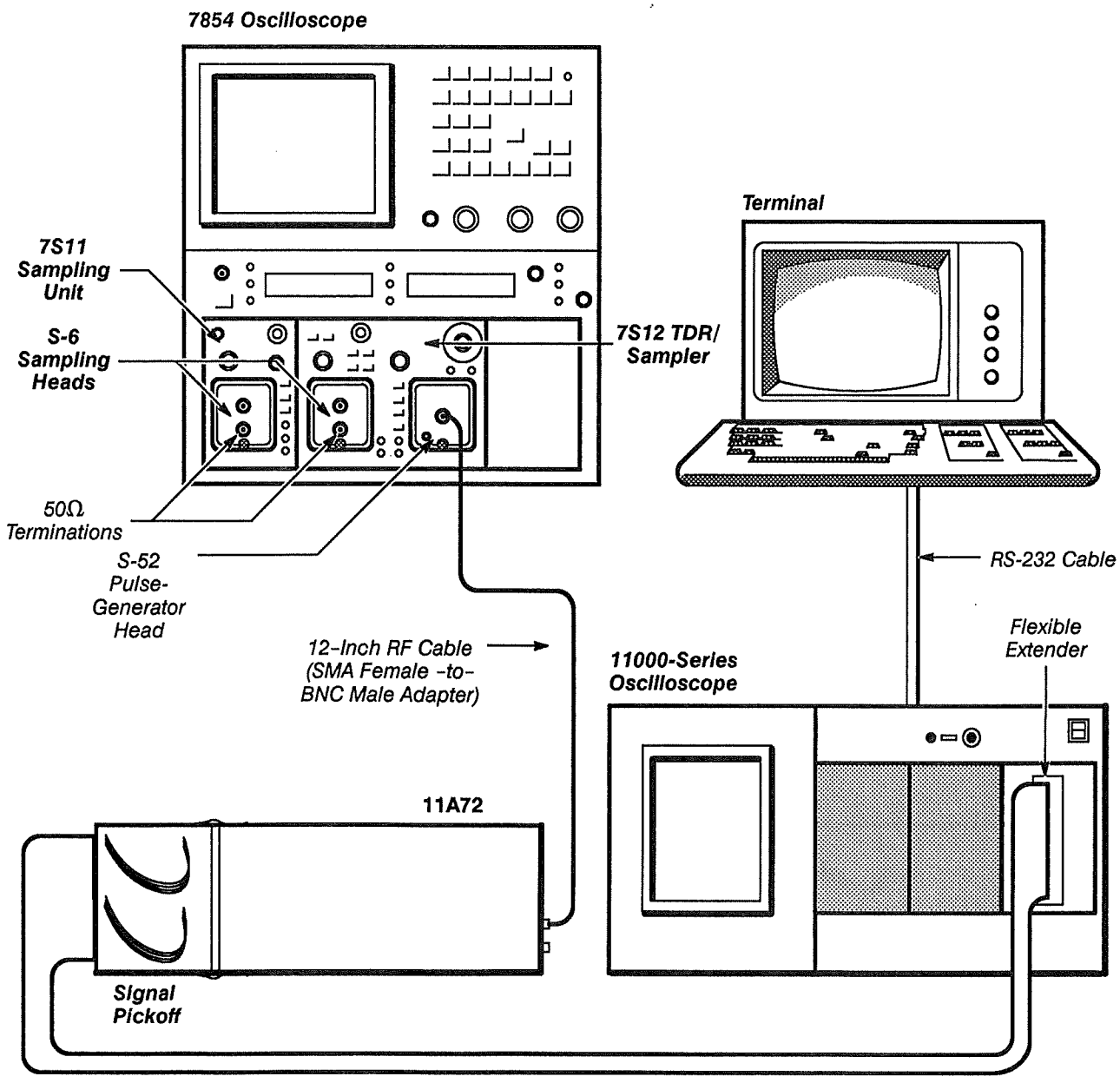

Alternative Setup to Examine/Adjust Step Response

Alternative Procedure to Examine/Adjust Step Response

☐ Step 1: Perform the following settings in the order listed:

11000-Series Oscilloscope

ON/STANDBY switch ..... STANDBY

7S12 TDR/Sampler
- mV button ..... press
- Vert Gain ..... 50 mV/div
- Time/Div ..... 500 ps/div
- Rep button ..... press

7S11 Sampling Unit
- + Up button ..... press
- Vert Gain ..... 50 mV/div

7854 Oscilloscope
- Horizontal Mode ..... A
- Power ..... On
- Vertical Mode ..... Chop

11A72 Amplifier ..... no settings required

Terminal ..... powered on

☐ Step 2: Set the 7S12 TDR/Sampler DC Offset and the 7S11 Sampling unit DC Offset so that both waveforms on the 7854 Oscilloscope screen are on the horizontal centerline.

☐ Step 3: Set the 11000-Series Oscilloscope's ON/STANDBY switch to ON, and then **Initialize** the oscilloscope.

☐ Step 4: Connect the upper S-6 sampling head connector on the 7S12 TDR/ Sampler to the A11 signal pickoff cable.

☐ Step 5: Connect the upper S-6 sampling head connector on the 7S11 Sampling Unit to the B11 signal pickoff cable. Connect the SD-52 to CH 1 of the 11A72 Amplifier.

Note: *Signal pickoff cables A11 and B11 are the 11A72 Amplifier's differential display outputs.*

☐ Step 6: Set the 11A72 Amplifier's CH 1 display on/off button to on.

☐ Step 7: Set the Vertical Size of the 11000-Series Oscilloscope to 50 mV/div.

☐ Step 8: Set the 7854 Oscilloscope vertical mode to Right.

☐ Step 9: Set the 7S12 TDR/Sampler Time-Distance control so that the rising edge of the waveform is near the center of the screen.

☐ Step 10: Set the 7854 Oscilloscope vertical mode to Chop.

☐ Step 11: Set the 7S11 Sampling Unit Delay control so that the negative-going step and positive-going step are aligned within one division.

☐ Step 12: Press the Add button under Vertical Mode on the 7854 Oscilloscope.

☐ Step 13: Set the 7S11 Sampling Unit Delay control so that the waveform is level across the screen. (When the trace is level, the differential display outputs are horizontally aligned in time.)

☐ Step 14: Press the Invert button on the 7S11 Sampling Unit to view the rising edge of the pulse.

☐ Step 15: Set the 11000-Series Oscilloscope Vertical Offset to view the entire positive-going step. Do not change the offset settings on the 7S11 Sampling Unit or the 7S12 TDR/Sampler.

☐ Step 16: *Examine* that the first overshoot and the first undershoot are equal in magnitude (that is, that the peaks of the overshoot and undershoot are equidistant from the horizontal centerline).

DO NOT attempt to adjust the display step response adjustments CH1 HF1, CH1 HF2, CH1 HF3, and CH1 DISP HF (or CH2 HF1, CH2 HF2, CH2 HF3, and CH2 DISP HF for CH2) if the waveform is within the stated limits. Proceed to Step 18.

☐ Step 17: *Adjust* the display step response adjustments CH1 HF1, CH1 HF2, CH1 HF3, and CH1 DISP HF (or CH2 HF1, CH2 HF2, CH2 HF3 and CH2 DISP HF for CH2) so that the first overshoot and the first undershoot are equal in magnitude. (See Figure 2-2 for the location of these adjustments.)

Note: *Typically, adjustments CH1 HF1, CH1 HF2 and CH1 HF3 (or CH2 HF1, CH2 HF2, and CH2 HF3 for CH2) have very little effect on the display step response and can remain at midrange.*

☐ Step 18: Press the *f* button, and then the Both/Stored button on the 7854 Oscilloscope (this will display the digitally stored display signal and the acquired trigger signal of the amplifier).

☐ Step 19: Press the Average 10 button on the 7854 Oscilloscope to digitize and store the waveform.

☐ Step 20: Connect signal pickoff connectors A11 and B11 back into their respective connectors on the signal pickoff.

☐ Step 21: Disconnect the A13 signal pickoff connector from the signal pickoff, and then connect it to the upper S-6 sampling head connector in the 7S12 TDR/Sampler.

☐ Step 22: Disconnect the B13 signal pickoff connector from the signal pickoff, and then connect it to the upper S-6 sampling head connector in the 7S11 Sampling unit.

Note: *Signal pickoff cables A13 and B13 are the 11A72 Amplifier's differential trigger outputs.*

☐ Step 23: Set the Stored Intensity and the A Intensity knobs on the 7854 Oscilloscope for the optimum display of both waveforms.

☐ Step 24: Set the 11000-Series Oscilloscope Vertical Offset for the optimum vertical alignment between the two waveforms.

☐ Step 25: Set the 7S12 TDR/Sampler Fine Time (zero set) control for the optimum horizontal alignment between the two waveforms.

☐ Step 26: *Examine* that the waveforms match each other vertically within 3%.

STOP

DO NOT attempt to adjust the trigger step response if the waveforms are within the stated limits. Proceed to Step 28.

☐ Step 27: *Adjust* the trigger step response to achieve the closest match of the two waveforms. Type **RCAL 70:**X on the computer keyboard where X is a number between −1.0 and +1.0, and then vary the value of X to achieve the closest match of the waveforms.

Note: *If you are adjusting the CH 2 trigger step response, the syntax is* ***RCAL 198:****X.*

☐ Step 28: Repeat the alternative procedure to *Examine/Adjust* step response with the S-52 Pulse Generator connected to the 11A72 Amplifier's CH 2 connector.

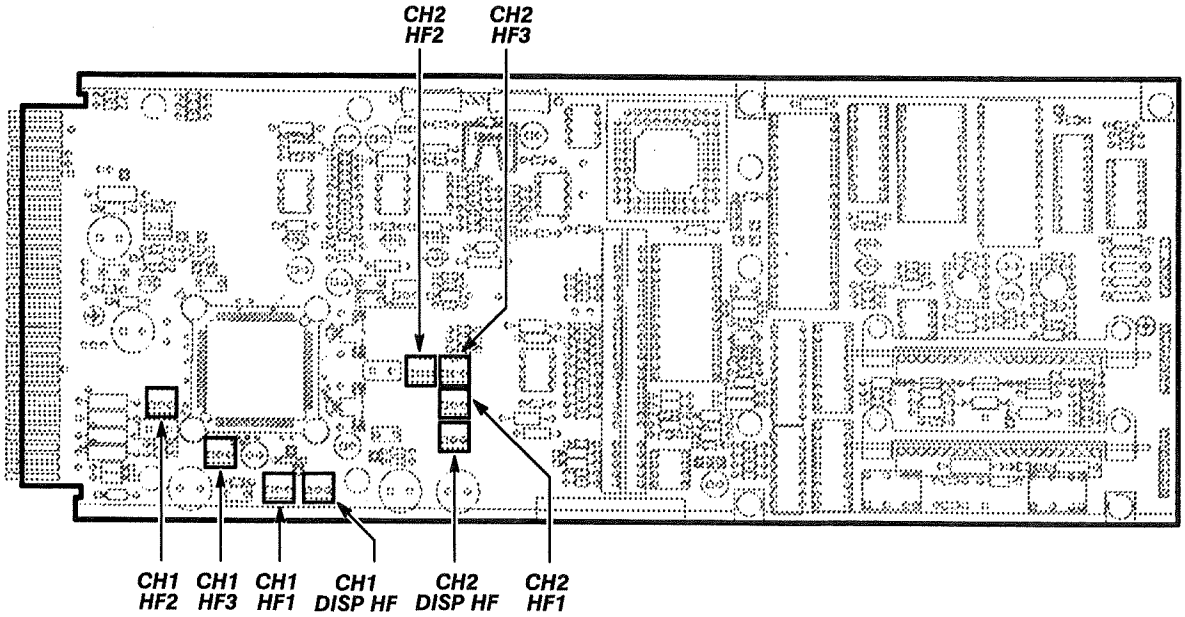

Figure 2-2 *— 11A72 Amplifier High Frequency Adjustment Locations*

Part 7 Bandwidth

This part first characterizes the bandwidth of the oscilloscope and then shows the setup and lists the steps to check the amplifier bandwidth. You can only perform this part with 11000-Series Oscilloscopes that have a 1 GHz system bandwidth.

Connect all equipment as shown in the setups.

Specifications

The specifications for this part are as follows:

- At 1000 MHz the signal amplitude must be ≥86.3% of the reference amplitude.
- At 500 MHz the signal amplitude must be ≥92.5% of the reference amplitude.

Refer to Table 2-4, 11A72 Amplifier Bandwidth for specific Reference Amplitudes and Calculated Ratios.

Setup to Characterize Oscilloscope Bandwidth

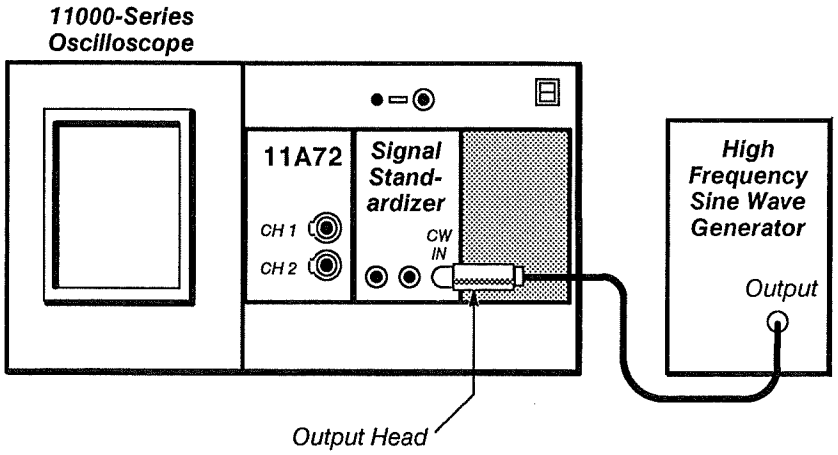

Setup to Characterize Oscilloscope Bandwidth

Procedure to Characterize Oscilloscope Bandwidth

☐ Step 1: **Initialize** the oscilloscope's settings, then perform the following settings the order listed:

11000-Series Oscilloscope

Def Wfm ..... touch
C ..... touch
Enter Desc ..... touch
TRIGGER button ..... press
Source Desc ..... touch
C ..... touch
Enter Desc ..... touch
Main Size ..... 10 μs/div

11A72 Amplifier ..... not used in this step
Signal Standardizer
Test ..... Vert or Horiz Freq Resp
High frequency sine wave generator
Frequency ..... Ref

The reference frequency must be between 50 kHz and 6 MHz.

☐ Step 2: Set the Amplitude of the high frequency sine wave generator so that the CW Leveled light on the signal standardizer is on. Ensure that the light remains on throughout the following steps.

☐ Step 3: Set the Position and Amplitude on the signal standardizer for a 6-division display amplitude, centered on the screen.

☐ Step 4: Set the high frequency sine wave generator Frequency to the levels listed in the Test Frequency column (1) of Table 2-4. Record the displayed amplitude in the Displayed Amplitude column (2) of Table 2-4. This data is used in the Check Bandwidth procedure, that follows, for calculating the bandwidth of the amplifier.

☐ Step 5: Set the oscilloscope's ON/STANDBY switch to STANDBY.

☐ Step 6: Disconnect the high frequency sine wave generator from the signal standardizer, and then remove the signal standardizer from the center compartment. Remove the 11A72 amplifier from the left compartment, and reinstall the amplifier in the center compartment.

Setup to Check Bandwidth

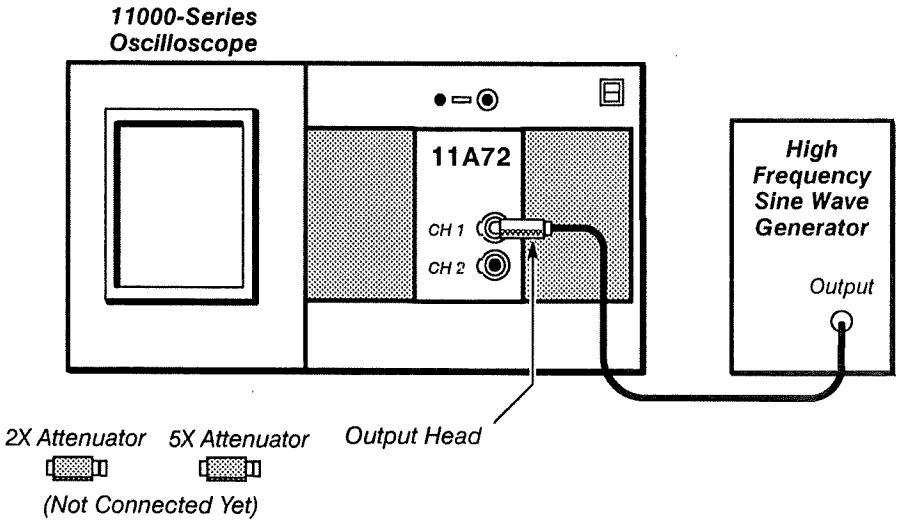

Setup to Check Bandwidth

Procedure to Check Bandwidth

Perform this procedure for each Vertical Size listed in column (3) of Table 2-4. If only performing a functional test, perform this procedure with the oscilloscope vertical size set to 500 mv/div.

When setting the reference amplitude at low vertical size settings, you may have to connect the attenuators to the high frequency sine wave generator to ensure proper amplitude settings.

To measure the amplitude, either count the divisions, or use the peak-to-peak measurement function of 11000-Series Oscilloscope.

☐ Step 1: **Initialize** the oscilloscope's settings, then perform the following settings the order listed:

11A72 Amplifier
CH1 Display on/off ..... on
11000-Series Oscilloscope
Main Size ..... 10 μs/div
High frequency sine wave generator
Amplitude ..... 4 V peak-to-peak
Frequency ..... Ref

☐ Step 2: Set the high frequency sine wave generator amplitude as listed in the Reference Amplitude column (4).

☐ Step 3: Set the high frequency sine wave generator frequency as listed in the Test Frequency column (1).

☐ Step 4: Record the Displayed Amplitude in column (5).

☐ Step 5: *Check* that the amplitude ratio, computed by dividing column (5) by column (2), is at least the value listed in the Calculated Ratio column (6).

☐ Step 6: Repeat all of this part for CH 2.

Table 2-4 – 11A72 Amplifier Bandwidth

(1)	(2)	(3)	(4)	(5)	(6)
	Oscilloscope with Standardizer	*Oscilloscope with Amplifier*			*Amplifier Only*
Test Frequency MHz	**Displayed Amplitude: div**	**Vertical Size**	**Reference Amplitude: div**	**Displayed Amplitude: div**	**Calculated Ratio [col (5)÷col (2)]**
1000	_____	1 V/div	4	_____	_____ ≥0.575[1]
1000	_____	500 mV/div	6	_____	_____ ≥0.863
1000	_____	50 mV/div	6	_____	_____ ≥0.863
1000	_____	20 mV/div	6	_____	_____ ≥0.863
1000	_____	10 mV/div	6	_____	_____ ≥0.863
500	_____	10 mV/div	6	_____	_____ ≥0.925

[1]At a Vertical Size of 1 V/div, the Calculated Ratio is 0.575 since the Reference Amplitude is set to four divisions; whereas at all other Vertical Size settings the Reference Amplitude is set to six divisions.

Part 8
ΔV DC Accuracy

The system ΔV DC accuracy is checked using a precision digital multimeter and a power supply. The system must be in the Enhanced Accuracy state during this procedure.

This part confirms that the amplifier can be accurately calibrated. This procedure does not test for oscilloscope accuracy or long term stability. Therefore, the characterization factor of the oscilloscope's calibration voltage reference must be calculated in Part 3, Oscilloscope Characterization. Also, you must perform this part immediately after entry into the Enhanced Accuracy state.

Connect all equipment as shown in the setups.

Specifications

The specifications for this part are as follows:

- for an eight division ΔV the ΔV DC Accuracy must be within ±(0.60% +0.01 div) when using an 11400-Series Oscilloscope
- for a six division ΔV the ΔV DC Accuracy must be within ±(0.80% +0.03 div) when using an 11300-Series Oscilloscope

Setup to Check ΔV DC Accuracy

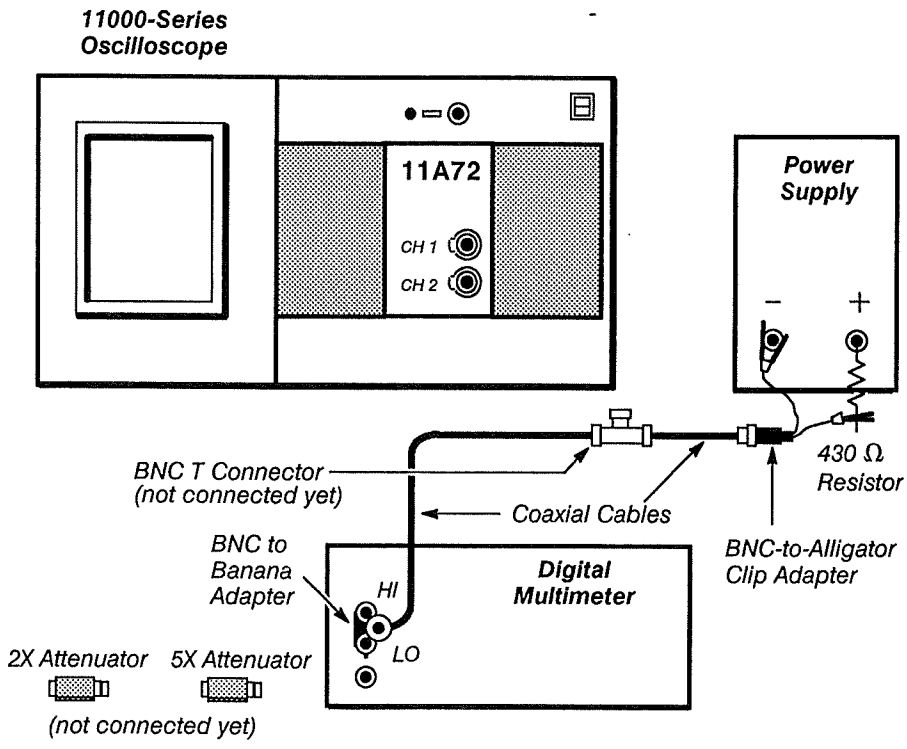

Setup to Check ΔV DC Accuracy

Procedure to Check ΔV DC Accuracy

You can perform this part with the 11A72 Amplifier installed in the following oscilloscopes:

- ◆ 11400-Series Oscilloscopes
- ▲ 11300-Series Oscilloscopes

If the environment is electrically noisy, then connect a capacitor (at least 0.1 μF) across the input terminals of the digital multimeter.

Press the Enhanced Accuracy button twice. Immediately after Enhanced Accuracy has completed and passed, perform this procedure.

When connecting the alligator clips, connect one clip to the power supply's negative terminal directly and the other clip to the 430 Ω resistor (not the power supply's positive terminal).

☐ Step 1: **Initialize** the oscilloscope's settings, then perform the following settings in the order listed:

11A72 Amplifier
CH 1 Display on/off ..... on
11000-Series Oscilloscope ..... no settings required
Power supply
Output ..... on
Digital multimeter (DMM)
Mode ..... DC
Range ..... auto

☐ Step 2: Set the oscilloscope to measure the ΔV DC accuracy as follows:

- ◆ Touch **Acquire Desc** in the WAVEFORM major menu, and then set **Average N** to **On** in the **Acquire Description** pop-up menu.
- ◆ Press the MEASURE button.
- ◆ Touch **Measurements** and then **Mean** in the **Measurements** pop-up menu.
- ◆ Touch **Mean** in the MEASURE major menu, and then set **Data Interval** to **whole zone** in the **Mean** pop-up menu.
- ◆ Touch **Compare and References** in the MEASURE major menu, and then set **Compare** to **On**.
- ▲ Press the CURSORS button, and then set the display for **Vertical Cursors**.

☐ Step 3: Connect the unconnected end of the BNC T Connector to the CH 1 input connector.

☐ Step 4: Set the voltage on the power supply so that the waveform is on the first graticule line above the bottom of the screen. Read the DMM and record the absolute value (that is, disregard the polarity) as V_1.

☐ Step 5: Set the reference point for measuring the ΔV DC accuracy.

- ◆ Touch **Compare and References** in the MEASURE major menu and then **Save Current Meas Values as References** in the **Compare and Reference values** pop-up menu.
- ▲ Press the FINE resolution button above the left control knob, and then position the **Vert Ref** cursor on the trace.

☐ Step 6: Set the voltage on the power supply so that the waveform is on the first graticule line below the top of the screen. Read the DMM and add the absolute value (again, disregard the polarity) to V_1. Record this value as V_2.

☐ Step 7: Read and record the voltage difference between the previous waveforms as follows:

- ◆ Read and record the Δ**Mean** value in the MEASURE major menu as V_3.
- ▲ Press the FINE resolution button above the right control knob, and the position the Δ**Vert** cursor on the trace.
- ▲ Read the Δ**Vert** readout and record this value as V_3 for later use.

☐ Step 8: Divide V_2 by the Δ**Mean** readout [that is, $1 \pm (.008 + .03$ div/6 div)] V_3. Then, divide this result by the characterization factor of the oscilloscopes calibration voltage reference (obtained in Part 3, Oscilloscope Characterization procedure).

☐ Step 9: *Check* that the result is within specification as follows:.

- ◆ *Check* that the result obtained in Step 7 is ≥ 0.993 but ≤ 1.007 [that is, $1 \pm (.006 + .01$ div/8 div)].
- ▲ *Check* that the result obtained in Step 7 is ≥ 0.987 but ≤ 1.013 [that is, $1 \pm (.008 + .03$ div/6 div)].

STOP

DO NOT perform Step 10 if only performing a functional test. Proceed to Step 11.

☐ Step 10: Repeat Steps 3 through 8 for the vertical size settings listed below.

1 V/div
0.5 V/div
0.2 V/div
0.1 V/div
50 mV/div
20 mV/div
10 mV/div

When testing with small voltages, it may help to install attenuators in series between the BNC-to-alligator clip adapter and the coaxial cable, so that you can set the voltages with better resolution. You can also use a DC voltage calibrator to achieve better resolution (when testing with small voltages).

☐ Step 11: Repeat all of this part for CH 2.

Part 9
DC Offset Accuracy

The system DC Offset is checked using a precision digital multimeter and a power supply.

This part confirms that the amplifier can be accurately calibrated. This procedure does not test for oscilloscope accuracy or long term stability. Therefore, the characterization factor of the oscilloscope's calibration voltage reference must be calculated in Part 3, Oscilloscope Characterization. Also, you must perform this part immediately after entry into the Enhanced Accuracy state.

Connect all equipment as shown in the setups.

Specifications

The offset error must be within ±(0.40% + 0.01 div) of the vertical offset setting. Refer to Table 2-5, 11A72 Amplifier DC Offset Accuracy, for specific numbers for each vertical offset setting.

Setup to Check DC Offset Accuracy

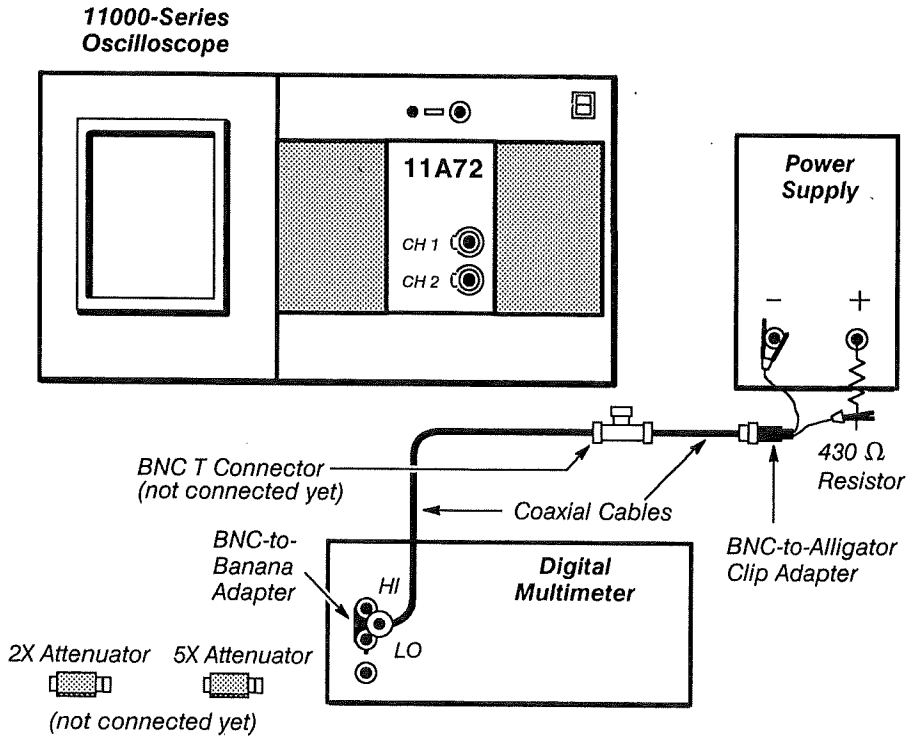

Setup to Check DC Offset Accuracy

Procedure to Check DC Offset Accuracy

You can perform this part with the 11A72 Amplifier installed in the following oscilloscopes:

- ◆ 11400-Series Oscilloscopes
- ▲ 11300-Series Oscilloscopes

If the environment is electrically noisy, then connect a capacitor (at least 0.1 μF) across the input terminals of the digital multimeter (DMM).

Press the Enhanced Accuracy button twice. Immediately after Enhanced Accuracy has completed and passed, perform this procedure.

When connecting the alligator clips, connect one clip to the power supply's negative terminal directly and the other clip to the 430 Ω resistor (not the power supply's positive terminal).

☐ Step 1: **Initialize** the oscilloscope's settings, then perform the following settings in the order listed:

11A72 Amplifier
  CH 1 Display on/off ..... on
11000-Series Oscilloscope ..... no setting changes
Power supply
  Output ..... on
Digital multimeter (DMM)
  Mode ..... DC
  Range ..... auto

☐ Step 2: Measure the position of the displayed waveform (it should be near the center of the graticule) as follows:

- ◆ Press the WAVEFORM button, and then touch **Acquire Desc**.
- ◆ Set **Average N** to **On** in the **Acquire Description** pop-up menu.
- ◆ Press the MEASURE button, and then touch **Measurements**.
- ◆ Touch **Mean** in the **Measurements** pop-up menu, and then touch **Mean** in the MEASURE major menu.
- ◆ Set **Data Interval** to **whole zone** in the **Mean** pop-up menu.
- ◆ Note the **Mean** reading.

- ▲ Press the CURSORS button, and then set the display for **Vertical Cursors**.
- ▲ Position the **Vert Ref** cursor on the horizontal centerline and the **ΔVert** cursor on the trace.
- ▲ Note the **ΔVert** reading.

☐ Step 3: Connect the unconnected end of the BNC T Connector to the CH 1 input connector.

☐ Step 4: Set the VERTICAL OFFSET to 4 V (refer to Table 2-5 for the Vertical Offset settings for successive tests) as follows:

- ◆ Touch the vertical icon, and then set **Vert Offset** to 4 V.
- ▲ Press the Vertical Offset button, and then set **L1 Offset** to 4.0000 V.

☐ Step 5: Set the Power Supply voltage so that the displayed waveform returns to the position noted in Step 2.

☐ Step 6: Record the DMM reading as V_1 for later use.

☐ Step 7: Divide V_1 by the oscilloscope characterization factor (obtained in Part 3, Oscilloscope Characterization) and subtract the Vertical Offset setting listed in Table 2-5.

☐ Step 8: *Check* that the result obtained in Step 6 is less than the Error Limit listed in Table 2-5.

DO NOT perform Step 10 if only performing a functional test. Proceed to Step 11.

☐ Step 9: Disconnect the BNC T connector at the CH 1 input connector, and set the Vertical Offset to 0.

☐ Step 10: Repeat Steps 2 through 8 for each Vertical Size and Vertical Offset listed in Table 2-5. When testing with small voltages, it may help to install attenuators in series between the BNC-to-alligator adapters and the coaxial cable so that you can set the voltages with better resolution. You can also use a DC voltage calibrator to achieve better resolution (when testing with small voltages).

Table 2-5 *– 11A72 Amplifier DC Offset Accuracy*

Vertical Size	Vertical Offset	Error Limit (± Volts)
1 V/div	4 V	26.0 mV
500 mV/div	4 V	21.0 mV
200 mV/div	2 V	10.0 mV
100 mV/div	1 V	5.0 mV
50 mV/div	500 mV	2.5 mV
20 mV/div	200 mV	1.0 mV
10 mV/div	100 mV	0.50 mV
10 mV/div	50 mV	0.30 mV

☐ Step 11: Repeat all of this part for CH 2.

Part 10 DC Balance

This part examines the position of the displayed trace without an applied input signal applied.

This part confirms that DC balance can be accomplished accurately. This procedure does not test for drift over time or temperature. Therefore, you must perform this part immediately after entry into the Enhanced Accuracy state.

Specification

Balance within ±0.1 division.

Setup to Check DC Balance

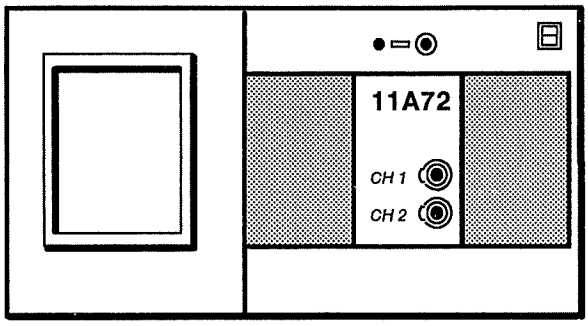

Setup to Check DC Balance

Procedure to Check DC Balance

You can perform this part with the 11A72 Amplifier installed in the following oscilloscopes:

- ◆ 11400-Series Oscilloscopes
- ▲ 11300-Series Oscilloscopes

☐ Step 1: **Initialize** the oscilloscope's settings, then perform the following settings in the order listed:

11A72 Amplifier
CH 1 Display on/off ..... on
11000-Series Oscilloscope ..... no setting changes

☐ Step 2: Measure the trace position as follows:

- ◆ Press the WAVEFORM button, and then touch **Acquire Desc**.
- ◆ Set **Average N** to **On** in the **Acquire Description** pop-up menu.
- ◆ Press the MEASURE button, and then touch **Measurements**.
- ◆ Touch **Mean** in the **Measurements** pop-up menu and then **Mean** in the MEASURE major menu.

- ◆ Set **Data Interval** to **whole zone** in the **Mean** pop-up menu.
- ◆ Monitor the **Mean** reading when measuring and setting the trace position.

- ▲ Press the CURSORS button, and then set the display for **Vertical Cursors**.
- ▲ Position the **Vert Ref** cursor on the horizontal centerline and the **ΔVert** cursor on the trace.
- ▲ Monitor the **ΔVert** reading when measuring and setting the trace position.

☐ Step 3: *Check* that the displayed trace position is at the center graticule line, within ±0.1 division, for every Vertical Size setting on the oscilloscope.

Maintenance

This section contains information for performing preventive maintenance, corrective maintenance, and diagnostic troubleshooting on the 11A72 Amplifier. For more information on any equipment listed in this section refer to Table 2-2.

Preventive Maintenance

Preventive maintenance can prevent the amplifier from failing and promotes reliability of the amplifier as well. The environment in which the amplifier is operated determines the frequency of maintenance.

Amplifier Shield Removal

The side shields, top and bottom frames, and front panel reduce radiation of electromagnetic interference (EMI) from the amplifier. Grooves in the frame hold the side shields in place.

Remove a side shield as follows:

- ☐ Step 1: Pry the side shield from the rear of the amplifier
- ☐ Step 2: Lift up on the shield.
- ☐ Step 3: Gently remove the shield from the grooves in the frame and front panel.

Install a side shield as follows:

- ☐ Step 1: Position the shield over the frame grooves.
- ☐ Step 2: Slide the front lip of the side shield under the front panel.
- ☐ Step 3: Press down on the shield until it snaps into place. (Pressure must be applied along the full length of the frames to secure the shield.)

Note that the amplifier will not slide into the oscilloscope if the side shields are not fully seated in the frames.

Cleaning

The amplifier should be cleaned as often as operating conditions require. Dirt on a component acts as an insulating blanket and prevents efficient heat dissipation. Dirt also provides an electrical conduction path, which may cause the amplifier to fail.

The side shields of the amplifier, reduce the amount of dust reaching the interior of the amplifier. Therefore, keep the amplifier side shields in place for safety and cooling (except when you are performing internal adjustments or maintenance procedures).

CAUTION

Avoid the use of chemical cleaning agents which might damage the materials in this amplifier: Use only isopropyl alcohol or totally denatured ethyl alcohol. Before using any other type of cleaner, consult your local Tektronix service center or representative.

Exterior – dust on the outside of the amplifier can be removed with a soft cloth or small brush. The brush is particularly useful for dislodging dirt in and around the side-shield ventilation holes and front panel switches. Remove the side shields first before cleaning.

Interior – cleaning the interior of the amplifier is seldom required. Although cleaning may be necessary if the interior of the amplifier accumulates dust or dirt, To clean, blow off the dust with dry, low-velocity air, and remove any dirt that remains with a soft brush or a cloth dampened with a mild detergent and water solution. (A cotton-tipped applicator is useful for cleaning in narrow spaces or for cleaning more delicate components.) Then, clean these spaces and components with a washcloth dampened with water to remove any residue.

CAUTION

To prevent damage from electrical shorts, the boards and components must be dry before applying power.

Visual Inspection

The amplifier should be inspected occasionally for loosely-seated or heat-damaged components. The corrective procedure for most visible defects is obvious; however, particular care must be taken if heat-damaged parts are found. Since overheating usually indicates other problems with the amplifier; therefore, correcting the cause of overheating is important to prevent the damage from reoccurring.

Periodic Electrical Adjustment

To ensure accurate measurements, check the electrical adjustment of the amplifier after each 2,000 hours of operation; or every 24 months if you use the amplifier infrequently. Refer to Section 2, Checks and Adjustments for the procedures to check these electrical adjustments.

Corrective Maintenance

Corrective maintenance consists of Field Replaceable Unit (FRU) and FRU IC replacement. This section describes the techniques required to replace the FRUs in the amplifier.

Ordering Parts

When ordering replacement parts from Tektronix, Inc., include the following information:

- Amplifier type
- Amplifier serial number
- Description of the part (if electrical, include the circuit number)
- Tektronix part number

Static-Sensitive Device Classification

CAUTION

Static discharge can damage any semiconductor in the amplifier.

The amplifier contains electrical components that are susceptible to damage from static discharge. Refer to Table 3-1, Relative Susceptibility to Damage from Static Discharge, for the relative susceptibility of various classes of semiconductors. Static voltages of 1 kV to 30 kV are common in unprotected environments.

Observe the following precautions to avoid damage:

1. Minimize handling of static-sensitive components.
2. Transport and store static-sensitive components or assemblies in the original containers; either on a metal surface or conductive foam. Label any package that contains static-sensitive assemblies or components.
3. Wear a wrist strap while handling these components to discharge the static voltage from your body. Servicing static-sensitive assemblies or components should be performed only at a static-free work station by qualified service personnel. The use of the static control mat is recommended. Refer to Table 2-2, Test Equipment, for the part number of this piece of equipment.
4. Clear anything from the work station surface that is capable of generating or holding static charge.
5. Keep the component leads shorted together whenever possible.
6. Pick up components by the body, never by the leads.
7. Do not slide the components over any surface.
8. Avoid handling components in areas that have a floor or a work-surface covering that is capable of generating static charge.

Table 3-1 — Relative Susceptibility to Damage from Static Discharge

Semiconductor Classes	Relative Susceptibility Levels[1]
MOS or CMOS microcircuits, and discrete or linear microcircuits with MOS inputs (most sensitive)	1
ECL	2
Schottky signal diodes	3
Schottky TTL	4
High-frequency bipolar transistors	5
JFETs	6
Linear microcircuits	7
Low-power Schottky TTL	8
TTL (least sensitive)	9

[1]Voltage equivalent for levels.
1 = 100 to 500 V
2 = 200 to 500 V
3 = 250 V
4 = 500 V
5 = 400 to 600 V
6 = 600 to 800 V
7 = 400 to 1000 V (est.)
8 = 900 V
9 = 1200 V
(The voltage equivalent is the voltage discharged from a 100 pF capacitor through a resistance of 100 Ω.)

Removing/Replacing FRUs

Table 3-2, FRU Removal/Replacement Figure Cross Reference, should be used as a convenient reference for finding connector, screw, and index locations when removing and replacing FRUs. The first column in the table lists the FRU to be removed or replaced, and the second column lists the figures that you should reference for connector, screw, and index locations discussed in the procedures to remove/replace this FRU.

CAUTION

To avoid damage to the amplifier, set the oscilloscope's ON/STANDBY switch to STANDBY, and remove the amplifier from the oscilloscope before removing or replacing FRUs.

See Figure 3-1 to determine the location of an FRU.

The exploded-view drawing in Section 5, Replaceable Parts, may also be useful in the removal/replacement procedures that follow.

Note that the side shields will have to be removed to gain access to most of the parts listed in the removal/replacement procedures that follow.

Table 3-2 — FRU Removal/Replacement Figure Cross Reference

FRU to be Removed/ Replaced	Figures to Reference During Removal	Page
Attenuators	Figure 3-2 — Removing/Replacing an Attenuator	3-7
BNC Connector Assembly	Figure 3-3 — Removing/Replacing the BNC Connector Assembly and A2 Front Panel Board	3-10
	Figure 3-4 — Removing/Replacing the Front Panel	3-11
	Figure 3-6 — Removing/Replacing the A1 Main Board	3-15
	Figure 3-11 — Multi-Pin Connector Orientation	3-24
Front Panel	Figure 3-3 — Removing/Replacing the BNC Connector Assembly and A2 Front Panel Board	3-10
	Figure 3-4 — Removing/Replacing the Front Panel	3-11
Heat Sink	Figure 3-5 — Removing/Replacing the Heat Sink	3-13
	Figure 3-9 — Removing/Replacing the Hypcon Assembly	3-21
A1 Main Board	Figure 3-2 — Removing/Replacing an Attenuator	3-7
	Figure 3-5 — Removing/Replacing the Heat Sink	3-13
	Figure 3-6 — Removing/Replacing the A1 Main Board	3-15
	Figure 3-7— Torx Screen and Nut Block Orientation	3-16
	Figure 3-11 — Multi-Pin Connector Orientation	3-24
A2 Front Panel Board	Figure 3-3 — Removing/Replacing the BNC Connector Assembly and A2 Front Panel Board	3-10
	Figure 3-4 — Removing/Replacing the Front Panel	3-11
	Figure 3-11 — Multi-Pin Connector Orientation	3-24
U710 Serial Data Interface IC	Figure 3-8 — Semiconductor Indexing Diagram	3-18
U350 Hypcon Assembly	Figure 3-9 — Removing/Replacing the Hypcon Assembly	3-21
U1000 NV RAM IC	Figure 3-8 — Semiconductor Indexing Diagram	3-18
U1110 EPROM IC	Figure 3-8 — Semiconductor Indexing Diagram	3-18
	Figure 3-10 — IC Insertion/Extraction Pliers	3-22
U820 Processor IC	Figure 3-8 — Semiconductor Indexing Diagram	3-18
	Figure 3-10 — IC Insertion/Extraction Pliers	3-22

CAUTION

If the oscilloscope's green indicator light remains lit when the ON/STANDBY switch is in the STANDBY position, then the switch was internally disabled after the servicing of the Power Supply module. To enable the ON/STANDBY switch, refer to Section 3, Maintenance, of the Service Reference manual for your oscilloscope.

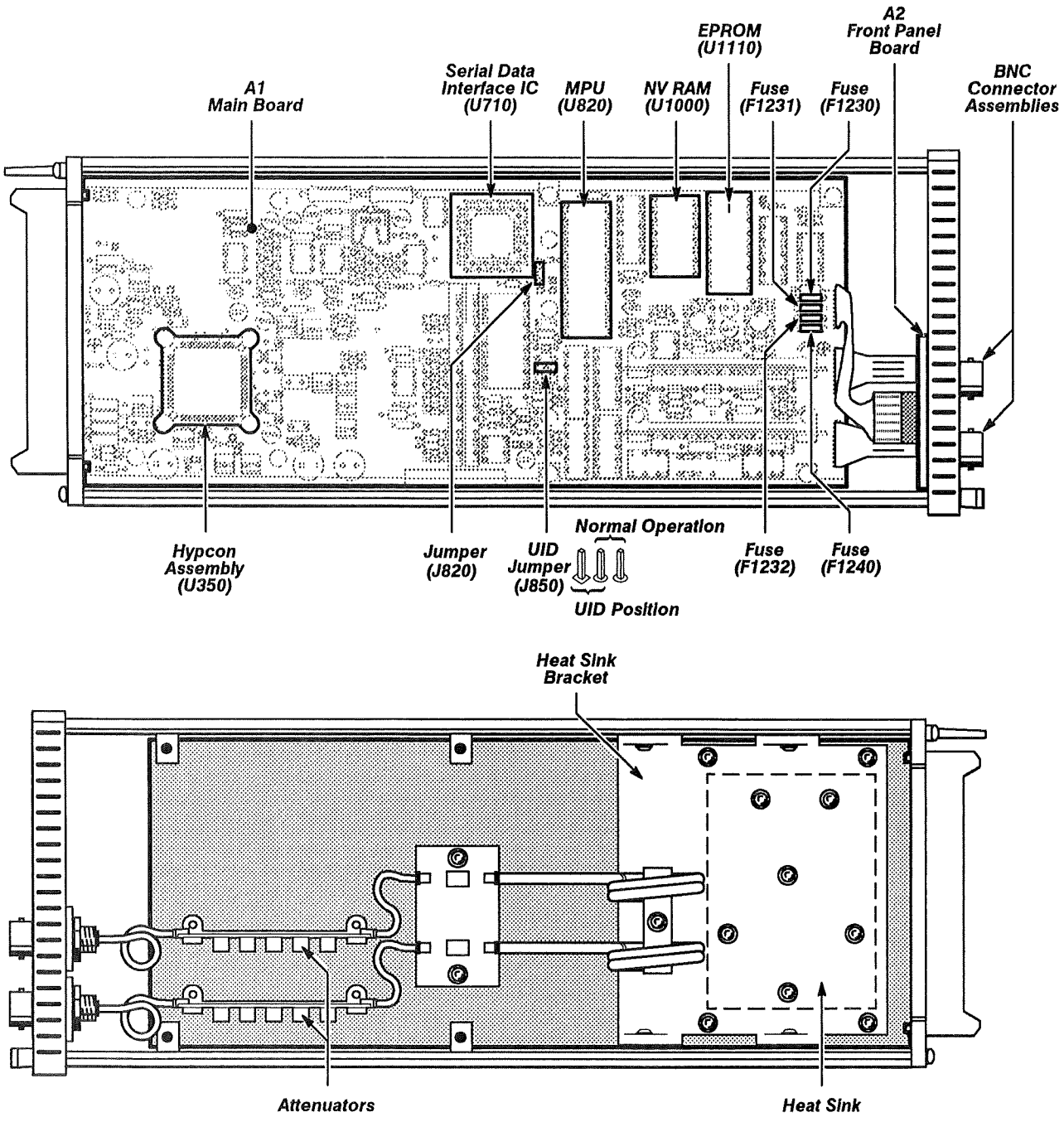

Figure 3-1 — FRU and FRU IC Locator

Removing/Replacing an Attenuator

See Figure 3-2 for connector and screw locations.

Since the CH 1 and CH 2 attenuators are identical, use the procedure that follows to remove or replace either the CH 1 or CH 2 attenuator.

Remove an attenuator as follows:

☐ Step 1: Disconnect the coaxial connectors from the input and output of the attenuator.

☐ Step 2: Remove the two Torx head screws that secure the attenuator to the A1 Main board.

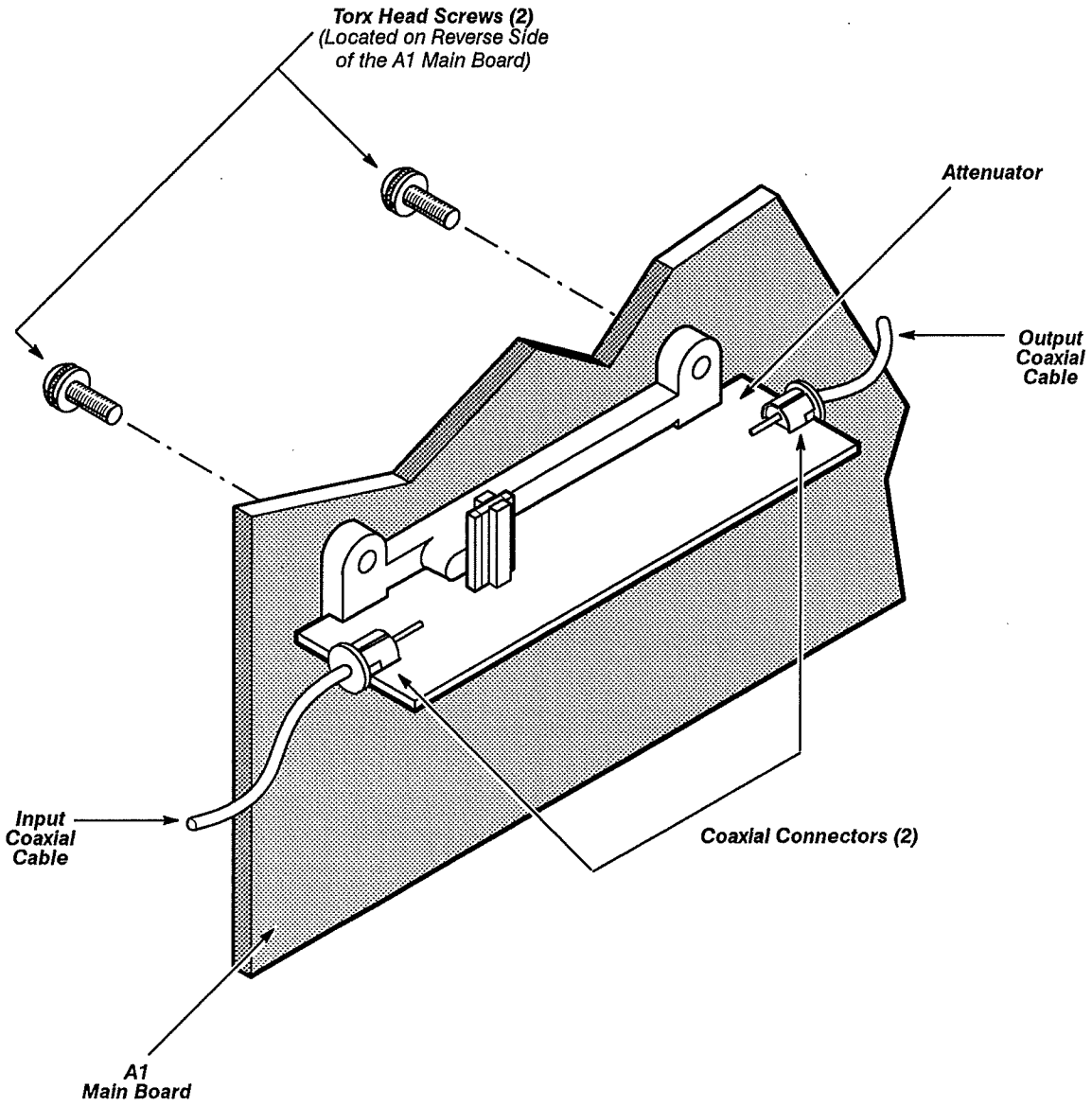

Figure 3-2 — Removing/Replacing an Attenuator

☐ Step 3: Using care to keep the attenuator straight, disconnect the attenuator from the A1 Main board. (Avoid disconnecting one end of the attenuator before disconnecting the other end, and while disconnecting the attenuator, do not apply force to any subcomponents on the attenuator.)

☐ Step 4: Remove the attenuator from the amplifier.

Replace an attenuator as follows:

☐ Step 1: Place the amplifier in the upright position with the pushbuttons facing downwards.

☐ Step 2: Align the attenuator pins with the receptacle on the A1 Main board, and align the attenuator frame with the holes in the A1 Main board.

☐ Step 3: Insert the attenuator into the receptacle on the A1 Main board. (While inserting this attenuator, do not apply force to any of its subcomponents on the attenuator.)

☐ Step 4: Replace the two Torx head screws that secure the attenuator to the A1 Main board.

☐ Step 5: Reconnect the coaxial connectors into the input and output of the attenuator. When engaging these connectors, use the following precautions:

- Ensure that the center conductor of the cable is straight. (Straighten the conductor if necessary.)
- Reconnect the connector directly into the receptacle.
- While you insert the connector, look through the slot in the outer receptacle to ensure that the center conductor enters its receptacle properly.

Removing/Replacing the BNC Connector Assembly

See Figures 3-3, 3-4, 3-6, and 3-11 for connector, screw, and index locations.

Remove the BNC connector assembly as follows:

☐ Step 1: Remove the front panel.

☐ Step 2: Disconnect the coaxial connector from the back of the BNC connector assembly.

☐ Step 3: Disconnect the multi-pin connector that connects from the A2 Front Panel board to the A1 Main board. (Note the position of the multi-pins index triangle to ensure that this connector can be correctly replaced.)

☐ Step 4: Disconnect the probe information connector, that is connected to the BNC connector assembly, from the A1 Main board as follows:

- Place your index finger under the metal contacts and your thumb on top
- Lift the seven metal contacts out of the receptacle on the A1 Main board. (The probe information cable is a flat, flexible, seven-conductor cable.)

☐ Step 5: Remove the four Torx head screws that secure the BNC connector assembly to the front subpanel.

☐ Step 6: Remove the BNC connector assembly from the amplifier.

Replace the BNC connector assembly as follows:

☐ Step 1: Set the gray connector alignment ring on the BNC connector with the ring's index on the inside of the connector assembly (that is, the side where the flat cable enters the connector assembly).

☐ Step 2: Insert the BNC connector and the connector alignment ring into the hole in the front subpanel. Ensure that the flat cable is oriented towards the inside of the amplifier and the index on the connector alignment ring fits into the notch in the front subpanel.

☐ Step 3: Replace the four Torx head screws that secure the connector assembly to the front subpanel.

☐ Step 4: Reconnect the probe information connector into its receptacle on the A1 Main board.

☐ Step 5: Reconnect the coaxial connector from the attenuator into the connector assembly as follows:

- Ensure that the center conductor of the coaxial wire is straight. (Straighten if necessary.)
- Reconnect the connector straight into the receptacle.

☐ Step 6: Reconnect the multi-pin connector from the A2 Front Panel board to the A1 Main board.

☐ Step 7: Replace the front panel.

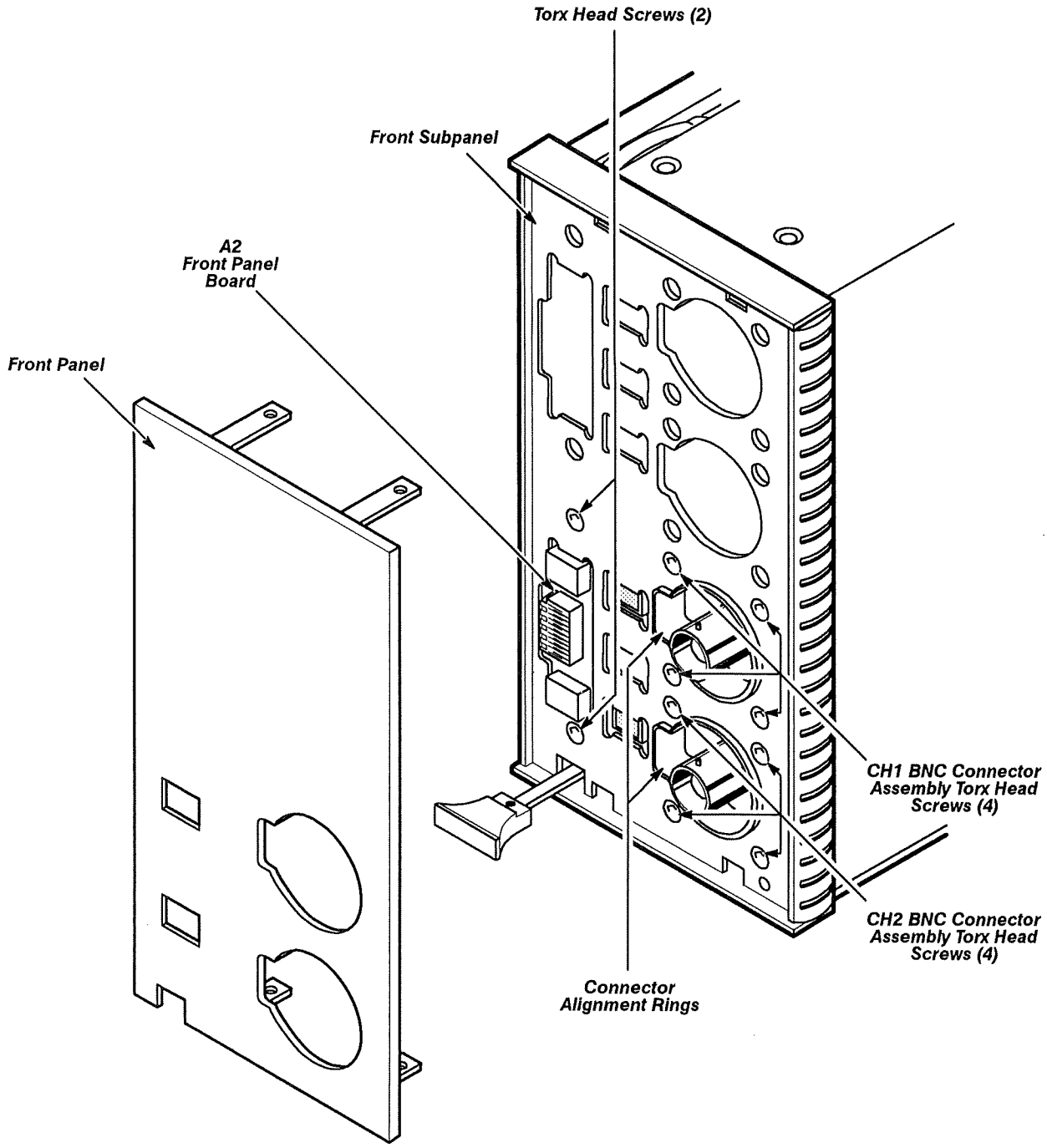

Figure 3-3 — *Removing/Replacing the BNC Connector Assembly and the A2 Front Panel Board*

Removing/Replacing the Front Panel

See Figures 3-3 and 3-4 for connector and screw locations.

Remove the front panel as follows:

- ☐ Step 1: Unhook the return spring, located on the bottom of the amplifier, from the release bar (retain this return spring).
- ☐ Step 2: Remove the four Torx head screws (two on the bottom and two on the top of the front panel) that secure the front subpanel to the top and bottom frames.
- ☐ Step 3: Pull the release bar out of the amplifier as far as possible, and then leave the release bar in this position.
- ☐ Step 4: Insert a slender, sharp tool (such as a scribe) between the subpanel, at the notch around the release bar, and the front panel.
- ☐ Step 5: Carefully separate the front panel from the subpanel. (Do not bend the front panel.)
- ☐ Step 6: Remove the front panel from the amplifier.

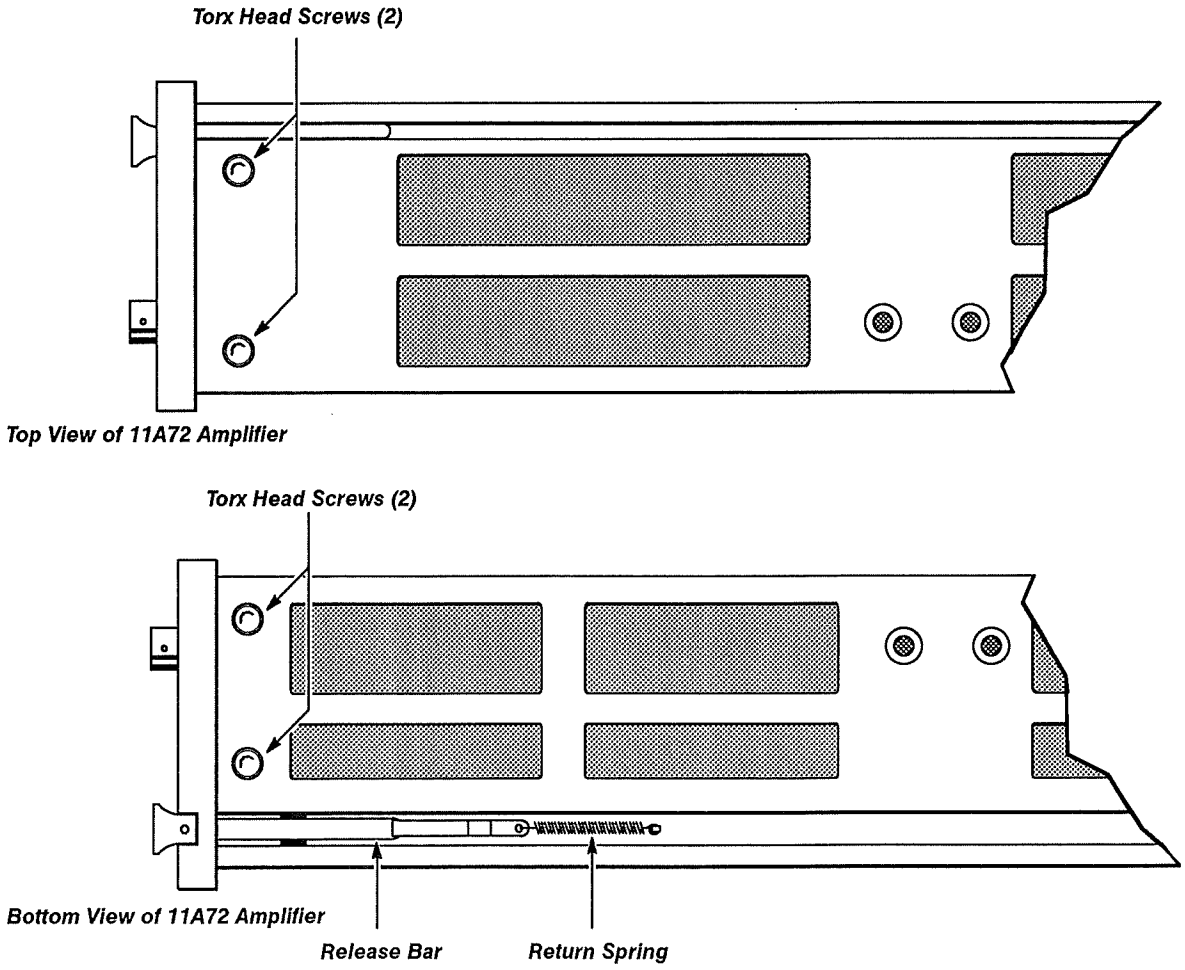

Figure 3-4 — Removing/Replacing the Front Panel

Replace the front panel as follows:

- ☐ Step 1: Ensure that the four screws that secure the front subpanel to the top and bottom frames are removed.
- ☐ Step 2: Ensure that the release bar return spring is removed.
- ☐ Step 3: Position the amplifier on its side, with the front panel facing towards you.
- ☐ Step 4: Pull the release bar out of the amplifier as far as possible, and then leave the release bar in this position.
- ☐ Step 5: Position the front panel so that the notch in the bottom fits over the release bar rod, then carefully insert the four front-panel tabs into the slots in the front subpanel. (You may need to pull the top and bottom frames away from the subpanel to allow the front panel tabs to fit between the casting and the frames.)
- ☐ Step 6: Carefully snap the edges of the front panel into place around the input connectors and the outer edges of the front panel.
- ☐ Step 7: Replace the four Torx head screws that secure the front subpanel to the top and bottom frames.
- ☐ Step 8: Replace the release bar return spring; orienting the spring so that its loop fits over the frame hook correctly (that is, flat against the frame section).

Removing/Replacing the Heat Sink

See Figures 3-5 and 3-9 for screw and index locations.

Remove and replace the heat sink as follows:

- ☐ Step 1: Remove the four Torx head screws that secure the plastic rear panel to the top and bottom frames.
- ☐ Step 2: Remove the plastic rear panel from the A1 Main board.
- ☐ Step 3: Remove the eleven Torx head screws and the plastic spacer that secure the heat sink bracket to the A1 Main board.
- ☐ Step 4: Remove the four Torx head screws that secure the heat sink bracket to the top and bottom frames.
- ☐ Step 5: Slide the heat sink bracket out the rear of the frame.
- ☐ Step 6: Remove the Hypcon assembly.
- ☐ Step 7: Remove the heat sink.

To replace the heat sink, perform the previous steps in the reverse order.

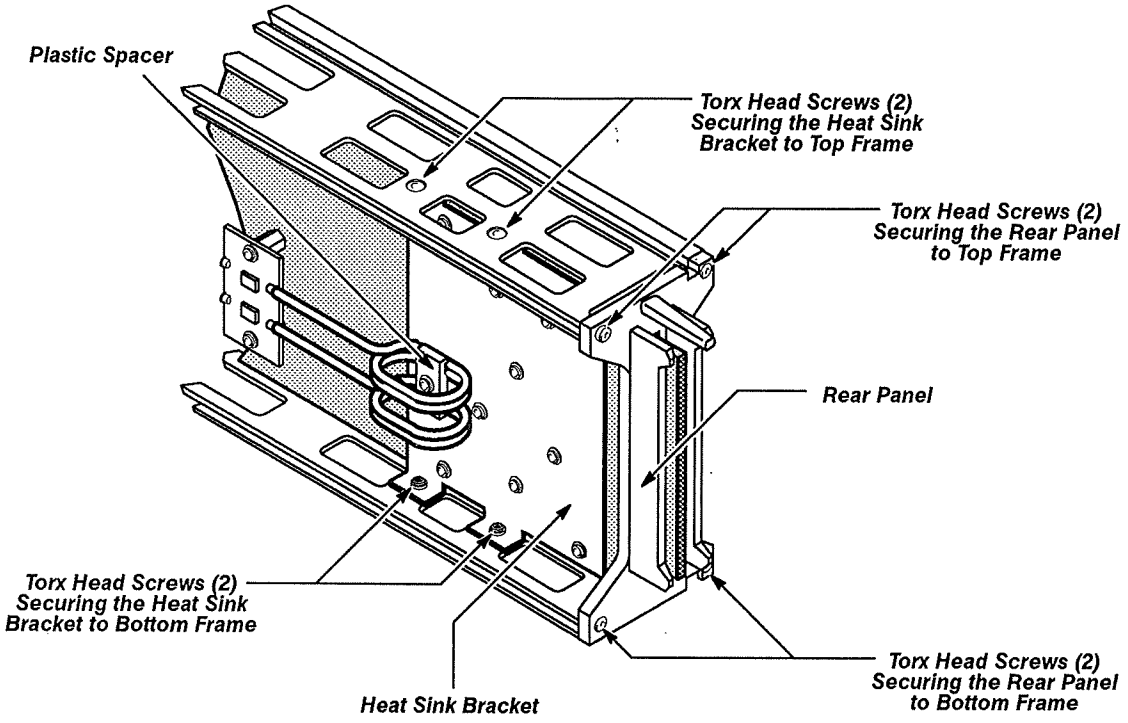

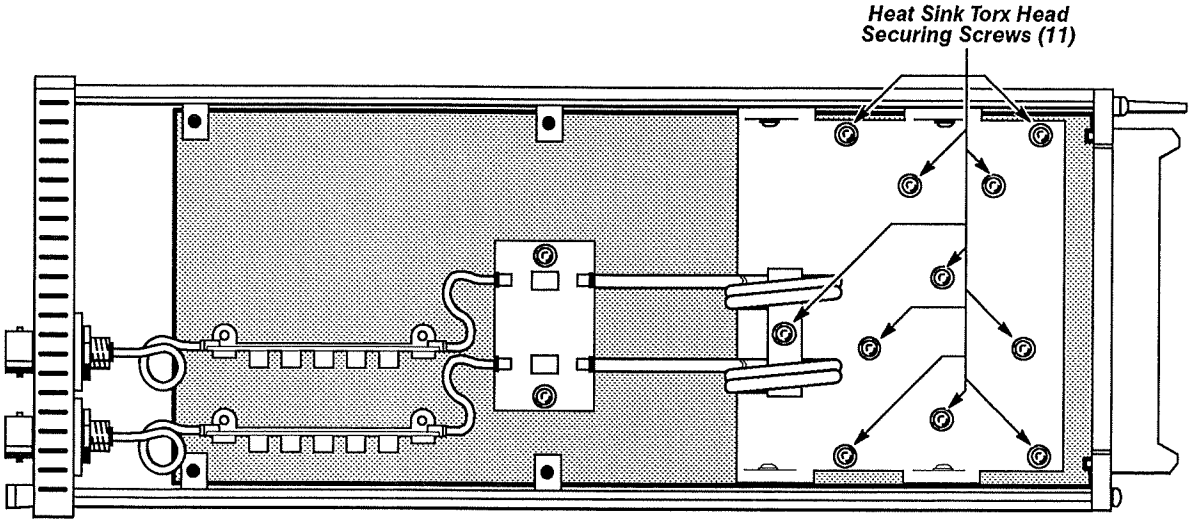

Figure 3-5 — *Removing/Replacing the Heat Sink*

Removing/Replacing the A1 Main Board

See Figures 3-2, 3-5, 3-6, 3-7, and 3-11 for connector, screw, and index locations.

Remove the A1 Main board as follows:

- ☐ Step 1: Remove the two attenuators.
- ☐ Step 2: Disconnect the multi-pin connector that connects from the A2 Front Panel board to the A1 Main board. (Note the position of the multi-pin connector's index triangle to ensure that this connector can be correctly replaced.)
- ☐ Step 3: Disconnect the probe information connectors from the A1 Main board as follows:
  - Place your index finger under the metal contacts your thumb on top.
  - Lift the seven metal contacts out of the receptacle on the A1 Main board.
- ☐ Step 4: Remove the four Torx head screws that secure the plastic rear panel to the top and bottom frames.
- ☐ Step 5: Remove the rear panel from the A1 Main board.
- ☐ Step 6: Remove the four Torx head screws that secure the heat sink bracket to the top and bottom frames.
- ☐ Step 7: Remove the four Torx head screws and nut blocks that secure the A1 Main board to the top and bottom frames.
- ☐ Step 8: Carefully withdraw the A1 Main board between the frames.
- ☐ Step 9: Remove the A1 Main board.

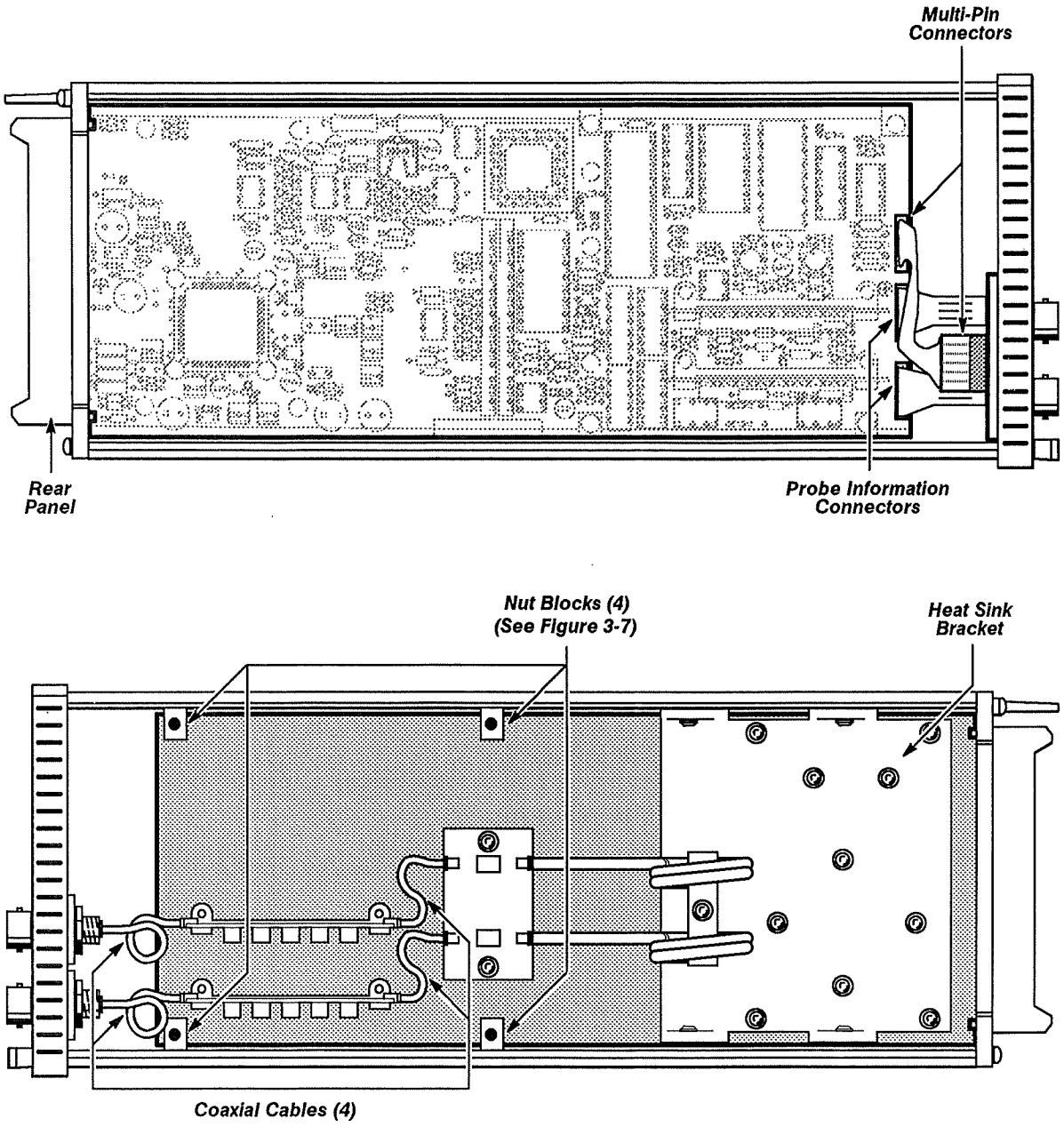

Figure 3-6 — *Removing/Replacing the A1 Main Board*

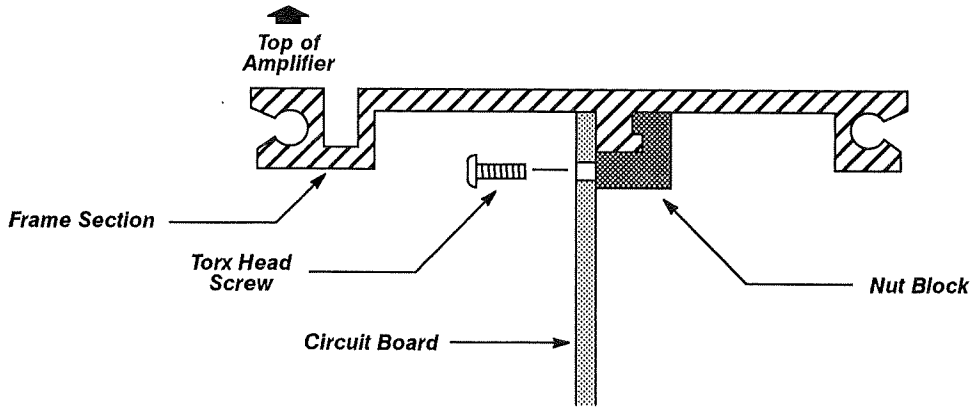

Figure 3-7 — Torx Screw and Nut Block Orientation

Replace the A1 Main board as follows:

- ☐ Step 1: Place the amplifier in the inverted position, with the pushbuttons facing upwards.
- ☐ Step 2: Carefully insert the A1 Main board between the frames until the plastic rear panel contacts the top and bottom frames. (The board fits on the top of the center ridges on the top and bottom frames.)
- ☐ Step 3: Replace the four Torx head screws that secure the heat sink bracket to the top and bottom frames.
- ☐ Step 4: Replace the four Torx head screws and nut blocks that secure the A1 Main board to the top and bottom frames.
- ☐ Step 5: Reconnect the probe information connectors into their receptacles on the A1 Main board.
- ☐ Step 6: Reconnect the multi-pin connector from the A2 Front Panel board to the connector on the A1 Main board.
- ☐ Step 7: Reattach the plastic rear panel to the A1 Main board.
- ☐ Step 8: Replace (but do not tighten) the four Torx head screws that secure the rear panel to the top and bottom frames.
- ☐ Step 9: Replace the eleven Torx head screws and the plastic spacer that secure the heat sink bracket to the A1 Main board.
- ☐ Step 10: Tighten the four Torx head screws that you replaced in Step 8.
- ☐ Step 11: Replace the attenuators.
- ☐ Step 12: If the A1 Main board has been replaced, then the Unit Identification (UID) number needs to be re-entered (refer to Programming the Unit Identification later in this section.)

Removing/Replacing the A2 Front Panel Board

See Figures 3-3, 3-4, and 3-11 for connector, screw, and index locations.

Remove and replace the A2 Front Panel board as follows:

☐ Step 1: Remove the front panel.

☐ Step 2: Disconnect the multi-pin connector that connects from the A2 Front Panel board to the A1 Main board. Note the position of the multi-pin connector's index triangle to ensure that this connector can be correctly replaced.

☐ Step 3: Remove the two Torx head screws that secure the A2 Front Panel board to the front subpanel.

☐ Step 4: Remove the A2 Front Panel board.

To replace the A2 Front Panel board, perform the previous steps in the reverse order.

Removing/Replacing FRU ICs

This section describes the procedures for removing and replacing the FRU ICs in the amplifier.

CAUTION *Observe all the special precautions mentioned under Static-Sensitive Device Classification earlier in this section.*

U710 Serial Data Interface Integrated Circuit ("Slam-Pack" IC)—The Serial Data Interface IC is indexed to its socket by a beveled corner. The other corners are notched to fit the edges of the socket. The beveled corner aligns with a spring (small metal tab) at one corner of the socket.

See Figure 3-8 for indexing information.

Remove the Serial Data Interface IC as follows:

☐ Step 1: To remove the retaining clip: hold the heat sink cover in place and move the retaining clip across the tabs while pushing down slightly on the cover.

☐ Step 2: Slowly remove the cover to prevent the IC from falling out. (Note the position of the index on the IC to ensure that this IC can be correctly replaced.)

☐ Step 3: Remove the IC with tweezers.

CAUTION *Avoid touching the IC or the socket contacts with your fingers since finger oils can lessen reliability.*

Replace the Serial Data Interface IC as follows:

☐ Step 1: Using tweezers, place the beveled corner of the replacement IC against the index spring.

CAUTION

Do not damage the spring with the beveled corner; this could cause a short in the two corner contacts.

☐ Step 2: Arrange the other corners, with the tweezers, to fit evenly at the edges of the socket.

☐ Step 3: Set the cover flat on the IC with the cover's end tabs properly aligned with, but not in, the mating recesses of the socket.

☐ Step 4: Push the cover down, keeping the cover flat on the IC, and slide the cover end tabs into place. Then, hold the cover in place while moving the retaining clip over the tabs on the other end of the cover.

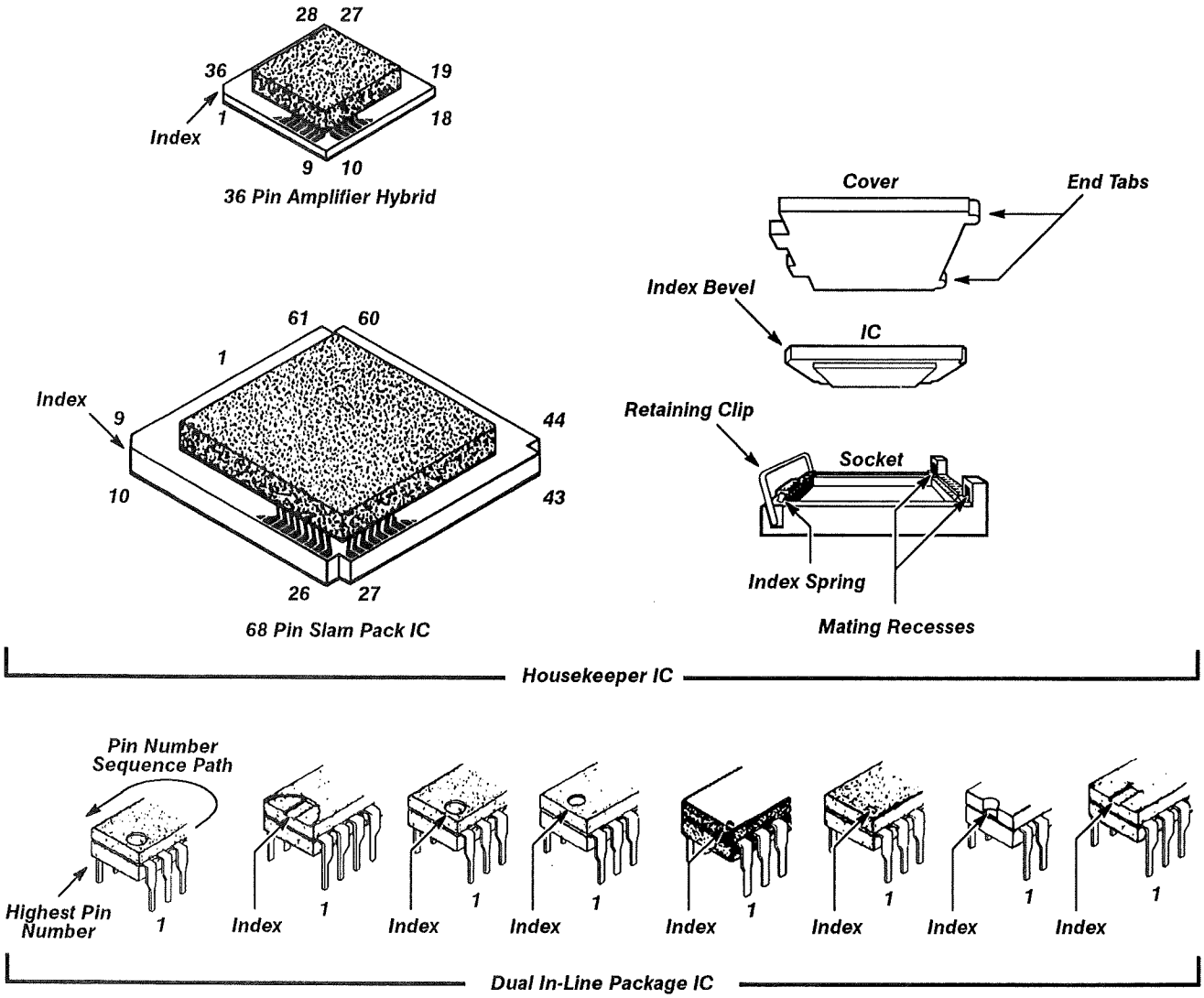

Figure 3-8 — Semiconductor Indexing Diagram

Removing/Replacing the U350 Hypcon Assembly

When replacing the Hypcon (**Hy**brid-**p**rinted circuit **con**nector) do not touch the elastomer's gold-plated contacts with your finger: instead, use a cleaner which will not lessen contact reliability. The Hypcon socket contacts are fragile. Therefore, refer to the cautions that follow, when removing and replacing a Hypcon, to avoid damaging these contacts.

Before remounting the Hypcon assembly, use a 4X (or greater) magnifying glass to examine the hybrid, elastomer, and the Hypcon contacts for dust, hair, lint, or other foreign matter. If the A1 Main board surfaces require more cleaning, then scrub the surface with a soft rubber eraser and blow on, or vacuum, the surface while dusting it with a small clean brush.

If the hybrid and elastomer contact holders are contaminated, then flush or spray the holders with alcohol.

CAUTION

Do not scrub with a cotton-tipped swab or similar device, since cotton fibers may adhere to the contacts.)

If the contact holder is excessively contaminated, then replace the holder.

Next, tighten the mounting screws with two inch-pounds of torque (2.3 centimeter-kilograms) to secure the Hypcon to the board.

Ensure that the elastomer is properly seated in the contact holder before remounting the assembly to the A1 Main board. (That is, use care when mounting the assembly to the board to ensure that the proper alignment exists between the connector and A1 Main board.)

CAUTION

Special care must be taken to ensure correct index alignment of each Hypcon part during reassembly; since failure to do so can result in a cracked hybrid substrate.

See Figure 3-9 for indexing information.

Remove the Hypcon assembly as follows:

- ☐ Step 1: Notice the index on the A1 Main board (arrow) and the plastic frame (pointed tab).
- ☐ Step 2: Unscrew and remove the four Torx head screw/washer assemblies.
- ☐ Step 3: Lift the plastic frame from the A1 Main board.
- ☐ Step 4: Notice the index location of the hybrid, and remove the hybrid from A1 Main board with the tweezers.

  Note: *Step 5 describes the removal of the elastomer from the plastic frame. This step is unnecessary when replacing the hybrid only.*

- ☐ Step 5: Notice the index location of the elastomer (contact holder). Grasp and lift the corner of the contact holder with the tweezers to remove the holder from the plastic frame. (Do not touch the gold-plated contacts with your fingers.)

Replace the Hypcon Assembly as follows:

☐ Step 1: Grasp a corner of the elastomer with the tweezers, and place the elastomer into the plastic frame.

☐ Step 2: Align the keyed corner of the elastomer with the keyed corner of plastic frame.

☐ Step 3: Tamp the elastomer into the plastic frame uniformly.

Note: *Keeping the elastomer clean is very important. Small hairs and elastomer flash under the contacts, which are almost invisible to the naked eye, can prevent good electrical contact. Most apparent failures of the hybrid are actually due to contamination of the Hypcon. Therefore, do not touch the gold-plated contacts with your fingers.*

☐ Step 4: Place the hybrid into the square hole in the A1 Main board. (The hybrid is keyed so that it will fit into the A1 Main board in only one orientation. When the back of the hybrid rests on the heat sink pedestal, the top of the hybrid should be flush with the top of the A1 Main board.)

☐ Step 5: Place the plastic frame, with the elastomer installed over the hybrid, so that the key (pointed tab) aligns with the corner arrow on the board.

☐ Step 6: Replace the four Torx head screw/washer assemblies, and apply two inch-pounds of torque, (2.3 cm-kg) to secure the connector assembly. Do not overtighten the assembly; since over-tightening the assembly will strip the microcircuit stiffener/heat sink mounting threads.

U1000 NV RAM IC—The NV RAM IC is located on the A1 Main board. If the NV RAM IC is soldered into the board, then consult a Tektronix service center for recommended removal procedures. Do not solder-in the replacement IC: Instead, install a 24-pin socket, and plug the NV RAM IC into this socket.

See 3-8 for indexing information.

U1110 EPROM IC—The EPROM IC is located on the A1 Main board.

CAUTION

Do not remove the label affixed to the top of EPROMs. Removing this label will allow light into the IC, and may cause part of the data in this IC to be erased.

See Figures 3-8 and 3-10 for equipment and indexing information.

Remove the EPROM IC as follows:

☐ Step 1: Use the insertion-extraction pliers to remove the IC.

☐ Step 2: Position the pliers around the outside of the IC. Squeeze the handles to grasp the IC, and slowly pull the IC from the socket.

Exploded View of Hypcon Connector

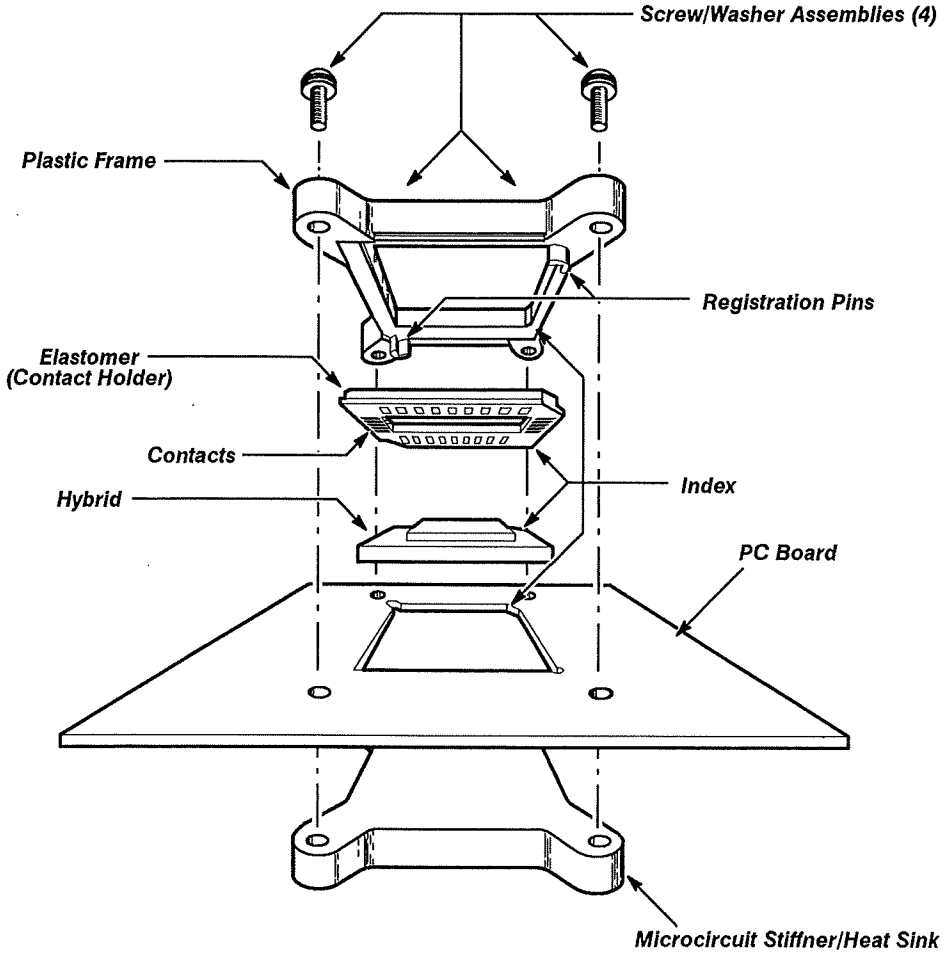

Cross Section View of Hypcon Connector

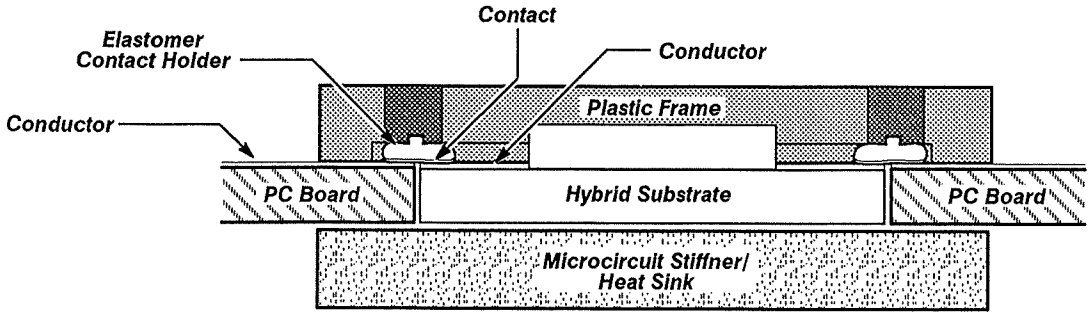

Figure 3-9 *— Removing/Replacing the Hypcon Assembly*

CAUTION *Avoid touching the IC pins or socket contacts with your fingers. Finger oils can lessen contact reliability.*

Replace the EPROM IC as follows:

☐ Step 1: Grasp the IC with the insertion-extraction pliers; ensuring that all the pins of the IC are straight and evenly spaced. (Do not use the IC label as an index, instead locate the index on the body of the IC.)

☐ Step 2: Align the index slot with the corresponding index on its socket.

☐ Step 3: Align the pins with their respective socket contacts.

☐ Step 4: Press the IC slowly and evenly into its socket.

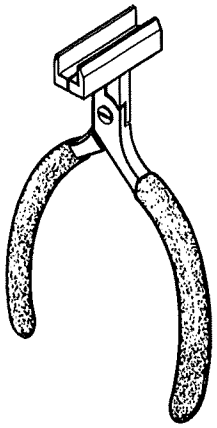

Figure 3-10 *– IC Insertion-Extraction Pliers*

U820 Processor IC—The Processor IC is located on the A1 Main board.

See Figures 3-8 and 3-10 for equipment and indexing information.

Remove the Processor IC follows:

☐ Step 1: Use the insertion-extraction pliers to remove the Processor IC.

☐ Step 2: Position the pliers around the outside of the IC, squeeze the handles to grasp the IC, and slowly pull the IC from the socket.

CAUTION

Avoid touching the IC pins or the socket contacts with your fingers: finger oils can lessen contact reliability.

Replace the Processor IC as follows:

☐ Step 1: Grasp the replacement IC with the insertion-extraction pliers; ensuring that all the pins of the IC are straight and evenly spaced.

☐ Step 2: Align the index slot on the IC with the corresponding index on its socket.

☐ Step 3: Align the IC pins with their respective socket contacts.

☐ Step 4: Press the IC slowly and evenly into its socket.

Programming the Unit Identification

The Unit Identification (UID) is identical to the serial number of the amplifier, and is stored in nonvolatile RAM (NV RAM). You will need to enter this number if the A1 Main board is replaced or if data in NV RAM becomes corrupted.

Enter the UID as follows:

☐ Step 1: Connect the terminal to the RS-232-C port of the oscilloscope. (Refer to the *User Reference* manual of your oscilloscope for instructions on setting up the RS-232-C parameters.)

☐ Step 2: Move the J850 jumper on the A1 Main board so that it covers the two left-most jumper pins (see Figure 3-1). Obtain the amplifier serial number from the printed tag on the amplifier rail near the front panel.

☐ Step 3: Place the amplifier in any compartment.

☐ Step 4: Set the ON/STANDBY switch to ON.

☐ Step 5: Wait until the diagnostics checks are completed.

☐ Step 6: On the Terminal, type the command:

UID [Left|Center|Right]:"<Serial Number>**"**

Left|Center|Right refers to the compartment that the amplifier resides.

☐ Step 7: On the Terminal, type the query:

UID? [Left|Center|Right]

Observe that the correct UID is reported.

☐ Step 8: Set the ON/STANDBY switch to STANDBY.

☐ Step 9: Remove the amplifier.

☐ Step 10: Return the jumper J850 on the A1 Main board to its normal operation position.

If you only need to confirm the UID, then still use this procedure, except you will skip Step 6.

Multi-Pin Connectors

Pin 1 on a multi-pin connector is designated with a triangle (or arrowhead) on the holder. A square pad on the board denotes pin 1. When a connection is made to a board, the square pad determines the indexing of the symbol on the multi-pin holder.

A gap between the pin 1 and 3 positions in the holder keys a multi-pin connector. There is a corresponding gap between pins 1 and 3 on the board. (A small plastic plug covers the pin 2 position on the end of the holder.)

Align the plastic plug of the holder with the gap between the board pins (see Figure 3-11).

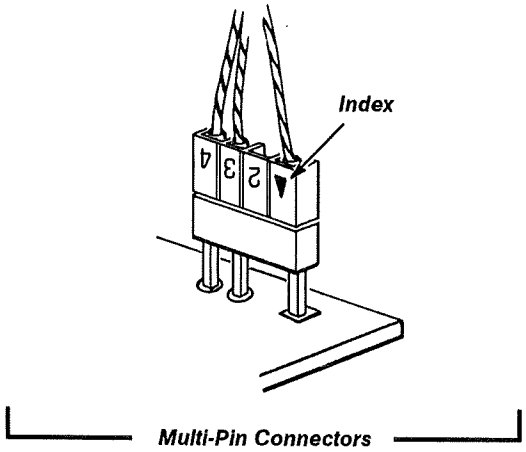

Figure 3-11 *– Multi-Pin Connector Orientation*

Diagnostic Troubleshooting

This section provides the information necessary to troubleshoot a faulty amplifier to the field replaceable unit (FRU) level. FRUs are board attenuator modules, and integrated circuits or hybrids that are replaceable without soldering. The primary means for troubleshooting is to use the error index code generated from the diagnostics or Self-Tests and cross-reference the code to the suspect FRU(s) using the FRU Guide tables, Tables 3-3 and 3-4.

After an FRU is replaced, perform the checks and adjustment procedures provided (in Section 2 of this manual).

Diagnostics Overview

The processor executes a set of Kernel tests prior to the Self-Tests. If this is successful, then the Self-Tests are executed to verify the functionality of each of the subsystems. Any failure causes the oscilloscope to enter Extended Diagnostics and to display the error index code(s) in a diagnostic menu. Extended Diagnostics tests are a superset of the Self-Tests.

The Kernel tests, Self-Tests/Extended Diagnostics, and Enhanced Accuracy mode produce and format error index codes differently, so these error index codes are discussed separately.

Some of the tests that may indicate faulty FRU(s) are not executed automatically during the Self-Tests (that is, you must manually select some tests to generate certain error codes).

The next two subsections provide a quick overview of Kernel tests and Extended Diagnostics.

For an overview of the Enhanced Accuracy mode, refer to Part 2, Enhanced Accuracy in Section 2, Checks and Adjustments.

Kernel Tests – Each time the front panel ON/STANDBY switch is set to ON, the oscilloscope and amplifier perform Power-on diagnostics on their microprocessor subsystems and Self-Tests diagnostics on all of their major circuits.

CAUTION

Turning the oscilloscope power off during the execution of the diagnostic tests may result in losing some or all of the non volatile RAM (NV RAM) data (for example, stored settings and calibration constants). This loss of data may cause the oscilloscope to operate unpredictably. If this occurs, refer to Restoring Calibration Data later in this section.

After the amplifier is powered-on and the microprocessor unit (MPU) is reset, the amplifier begins a sequence of test routines to determine if its Kernel systems are operating properly. If any of these tests fail, then it is unlikely that the amplifier can communicate failure information to the oscilloscope. The flashing of a fault code on the front panel CH 1 and CH 2 LEDs indicates which Kernel test is failing.

The following description explains how to read the fault code:

- Count the number of times the CH 2 LED turns on.

- If the amplifier Kernel tests detect a fault, then the CH 2 LED is flashed eight times.
- If the CH 1 LED is lit during a cycle of the CH 2 LED, then the test corresponding to the current count accumulated is the one which failed. Refer to the timing diagram in Figure 3-12 for an example LED fault code. The timing diagram illustrates a test number 2 failure.

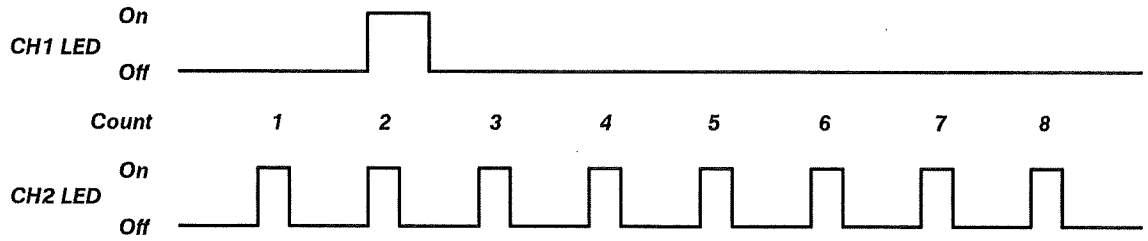

Figure 3-12 — Sample LED Fault Code Timing Diagram

The three amplifier Kernel tests are:

- **Test 1: The ROM Checksum test**—computes a checksum of the content of the firmware ROM. This calculated checksum is then compared with a checksum stored in the ROM. If the checksums do not match, the test fails, and fault code 1 is reported. After the front panel LEDs flush to report the fault code, the amplifier attempts to begin normal operation; but it is unlikely that the amplifier can function properly with a bad ROM Checksum.
- **Test 2: The Non volatile RAM (NV RAM) test**—verifies that the NV RAM is functioning properly. Since the NV RAM contains calibration information which must remain undamaged, this test does not alter critical data. If the testing algorithm detects a failure, then the amplifier reports a fault code of 2 and repeatedly loops the NV RAM test. The amplifier continues looping the NV RAM test until the oscilloscope is powered off (ON/STANDBY switch is set to STANDBY). Until the condition causing the NV RAM test to fail is corrected, the oscilloscope does not recognize the amplifier.

  The NV RAM test could corrupt data stored in the NV RAM if the oscilloscope is powered off and on during this test. If corruption occurs, then the Calconstant Checksum is corrupted as well. Furthermore, at the next power-on, the amplifier resets the cal constants to default ROM settings and reports a Plug-in (Amplifier) Calconstant Checksum Error during oscilloscope-invoked, power-on diagnostics. After the oscilloscope/amplifier system is executed through an Enhanced Accuracy cycle, the amplifier is once again properly calibrated.
- **Test 3: The Serial Data Interface IC test**—verifies the functionality of the Serial Data Interface (SDI) IC. The SDI IC performs the following housekeeping chores of the amplifier: channel sequencing, refreshing the analog control voltage system (AVCS), and providing serial data communications with the oscilloscope. This test exercises this IC, and records the ICs signature using an algorithm similar to signature analysis. If the resulting signature of the SDI

IC does not match a known good signature, then this test fails and a fault code of 3 is reported. If this test does fail, then the test is then re-executed repeatedly as long as the oscilloscope is powered on, generating activity on all SDI IC pins.

After all power-on Kernel tests have completed and successfully passed, the amplifier initializes its settings and communicates with the oscilloscope.

Self-Test/Extended Diagnostics – First, the amplifier must successfully power-on, initialize its settings, and establish communication with the oscilloscope. Then, the oscilloscope requests that the amplifier execute its Self-Tests routines (unless the oscilloscope's Self-Tests are disabled, in which case all the Self-Tests are of course ignored). Return to normal operation or entry into a new configuration, as discussed below, indicates successful completion of the Self-Test diagnostics. Any failures cause the oscilloscope to display the Extended Diagnostics menu. Record the displayed error codes for the failed circuit block(s). You may have to step through several pages of the menu display to find all the failure codes.

The format of the error index codes is based on the Extended Diagnostics menu structure. The Extended Diagnostics menus are in a three-level hierarchy with the Block menu at the highest level: Each amplifier is one Block. A Block is broken into a number of parts or circuit areas in the Area menu, the second level. Touching the Area selector at the bottom of the menu, displays the Area menu for the selected Block. Each circuit Area has a Routine menu, the third level, associated with it that has one or more selectable routines. Routines are the smallest test units that are executable. This Block, Area, and Routine menu hierarchy generates the error index codes.

Extended Diagnostics error index codes are five digit codes whose first character indicates the subsystem or amplifier (plug-in) tested. The last four digits are hexadecimal (hex) numbers that indicate the Block, Area, Routine and failure identity. For example, R1241 is decoded as follows:

R	Right Plug-in
1	Block name – plug-in
2	Area name – Group II
4	Routine name – Checksum Probe
1	Failure identity – specific failure mode

The subsystem character of an error index code is one of the following, and indicates the compartment in which the amplifier is installed:

L	Left
C	Center
R	Right

In the tables in this section, only the four-digit failure code is listed; the prefix L, C, or R is omitted.

Self-Test diagnostics test the following:

- Attenuator relay driver
- Probe coding
- Calibration (cal) constant checksums
- Calibration (cal) constant values
- Analog-to-digital (ADC) and digital-to-analog (DAC) converters
- Probe power fuses
- Signal path

Using the Self-Tests/Extended Diagnostics – After all Extended Diagnostic/Self-Tests are executed, any resultant error index codes appear on the display next to the associated circuit block names in the Extended Diagnostics menu. Each circuit block that experiences failure will indicate the first error encountered and the number of failures in the Block. To get a more complete list of the error index codes in a Block, select the selector of a failed Block and then the Area selector. To display the lowest level test routines in the selected Area, select the Routine selectcor. The currently selected Block, Area, and Routine are shown.

Several operating mode selectors are available on the screen. When certain test routines are selected, some of these operating modes can not be selected.

Refer to the *Oscilloscope's User Reference* for more information on Extended Diagnostics or Extended Test menus and operation.

Calibrating a New Configuration

When a amplifier is first installed in an oscilloscope or is moved to a different compartment in the oscilloscope, the oscilloscope enters a new configuration mode. After the oscilloscope executes the power-on diagnostics, it recalibrates itself for the new configuration. During this calibration, the message **Powerup new configuration partial calibration occurring** appears. If the calibration is successful then a message appears and the oscilloscope enters the normal operating mode.

Restoring Calibration Data

If the oscilloscope powered off (ON/STANDBY switch set to STANDBY) during probe calibration, Self-Tests, Extended Diagnostics or other intense system activity, then some internal data may be corrupted. If the Extended Diagnostic menu is displayed when the power is turned on, then this corruption has occurred.

If the Extended Diagnostics menu displays a **Cksm Probe** error (this error indicates that the power was turned off during probe calibration), then use the following procedure to restore normal operation:

☐ Step 1: Note from the Extended Diagnostics menu the amplifier at fault.

☐ Step 2: Exit the Extended Diagnostics menu.

☐ Step 3: Remove and replace the probes on the amplifier at fault.

☐ Step 4: Recalibrate these probes.

☐ Step 5: Execute the Self-Tests, and confirm that these tests pass.

If the Extended Diagnostics menu displays a **Cksm Plug** error or any other new error, then use the following procedure to restore normal operation:

☐ Step 1: Exit the Extended Diagnostic menu.

☐ Step 2: Wait for the self-calibration to complete and pass.

☐ Step 3: Execute the Self-Tests and confirm that these tests pass.

Usually these procedures restore normal operation. If these procedures do not restore normal operation, then the oscilloscope or amplifier requires service.

Memory Backup Power for the Amplifier

The non volatile RAM (NV RAM) within the amplifier allows the data in memory to be retained when the amplifier is removed.

The NV RAM stores system-configuration data such as the amplifier, oscilloscope, and probe identification numbers as well as the cal constants. The data that the NV RAM stores, enable the amplifier to resume Enhanced Accuracy performance from a powered-off condition, without performing a full calibration (Enhanced Accuracy) operation.

The rated lifetime of the NV RAMs internal power source is ten years. If, on system power-on, the amplifier habitually loses Enhanced Accuracy status without a system configuration change (that is, the amplifier remains plugged into the same slot in the same oscilloscope), then you may need to replace the NV RAM.

Field Replaceable Unit (FRU) Guide

This section correlates error index codes resulting from Diagnostic tests with the hybrid, integrated circuit (IC), module, or board FRU(s) suspected of causing each error. The FRU(s) in each category are listed in most-to-least probable cause (assuming only one error is indicated). If any diagnostic errors occur, inspect the suspect FRU for loose connections and components and then repeat the Diagnostic test. If any diagnostic errors reoccur, then replace the suspect FRU(s) with a good FRU(s). Verify that the new FRU is a correct replacement for the old FRU. If the old FRU contains firmware, then verify that new firmware version is either the same version as, or an updated version of, the old firmware version.

Abbreviations of FRU Names—Table 3-3, Board FRUs, lists the abbreviation used in the Suspect Board FRU(s) column of Tables 3-5, 3-6, and 3-7.

Table 3-3 *—Board FRUs*

Abbreviation	*Name*	*Designator*
Main	Main board	A1
Front	Front Panel board	A2

Abbreviations of Component and Module Names—Table 3-4, Component/Module FRUs, lists the abbreviation used in the Suspect Module, Hybrid, or IC FRU(s) column of Tables 3-5, 3-6, and 3-7.

Table 3-4 *— Component/Module FRUs*

Abbreviation	*Name*	*Designator*
MPU	Processor	U820
EPROM	Firmware	U1110
NV RAM	Memory	U1000
SDI	Serial Data Interface	U710
Att1	Attenuator, channel 1	
Att2	Attenuator, channel 2	
Amp	Hypcon	U350
FUSE	Probe power fuses	F1230, F1231, F1232, F1240

The error index codes are divided into three tables. A table of Kernel test error codes (Table 3-5), a table of Self-Tests/Extended Diagnostic error indexes (Table 3-6), and a table of Enhanced Accuracy error indexes (Table 3-7).

Error Index Codes—Table 3-5 lists the error codes possible in the Kernel Tests

Table 3-5 *— Amplifier Kernel Error Index Codes*

Error Code	*Suspect Module, Hybrid, or IC FRU(s)*	*Suspect Board (FRU(s)*
1	EPROM, MPU	Main
2	NV RAM	Main
3	SUI, MPU	Main

Table 3-6 lists the error messages possible in the Self-Tests and Extended Diagnostics.

Table 3-6 — *Self-Tests/Extended Diagnostics Error Index Codes*

Error Code	*Suspect Module, Hybrid, or IC FRU(s)*	*Suspect Board (FRU(s)*
1111		Main
1121		Main
1131[1]	NV RAM	Main
1141[1]	NV RAM	Main
1211		Main
1221	FUSE	Main
1311	SDI	Main
1811		Main
1821		Main

Note that interconnections are not listed but should be considered as possible problem sources.

Table 3-7 lists the error indexes resulting from Enhanced Accuracy. (Enhanced Accuracy is available after the system has a 20-minute warmup period.)

Table 3-7 — *Enhanced Accuracy Error Index Codes*

Error Code	*Suspect Module, Hybrid, or IC FRU(s)*	*Suspect Board (FRU(s)*
1411	Amp	Main
1421	Amp	Main
1431	Att1	
1441	Amp	Main
1451	Amp	Main
1461	Amp	Main
1471	Amp	Main
1481	Amp	Main
1491	Amp	Main
1611	Amp	Main
1621	Amp	Main
1631	Att2	
1641	Amp	Main

Table 3-7 — Enhanced Accuracy Error Index Codes (cont)

Error Code	*Suspect Module, Hybrid, or IC FRU(s)*	*Suspect Board (FRU(s)*
1651	Amp	Main
1661	Amp	Main
1671	Amp	Main
1681	Amp	Main
1691	Amp	Main

Fuse Troubleshooting

Failure code 1221 indicates that one or more probe power fuses are defective.

See Figure 3-1 (FRU locator) for fuse locations.

To find a defective fuse, remove the amplifier from the oscilloscope, and use a digital multimeter to check for continuity across each fuse. Replace all defective fuses. Then, install the amplifier in the oscilloscope and verify that the diagnostic error does not reappear.

The most likely cause of a blown fuse is a short circuit applied at the front-panel TEKPROBE® input connector. If a newly installed fuse blows with nothing connected at the TEKPROBE® input connector, then check for a short circuit on the A1 Main board or on the flexible circuit connecting the A1 Main board to the TEKPROBE® input connector.

Jumpers

Two jumpers, J820 and J850, are installed in the amplifier for normal operation. See Figure 3-1 for the location of these jumpers.

Jumper J820 should be installed over the two lower pins, and jumper J850 should be installed over the two right-most pins for normal operation.

Theory of Operation

The Tektronix 11A72 Two-Channel Amplifier is a wide bandwidth two-channel amplifier that plugs into 11000-Series amplifier oscilloscopes that accommodate amplifiers.

System Functional Overview

This section describes and illustrates (see Figure 4-1) the major functional blocks of the 11A72 Amplifier

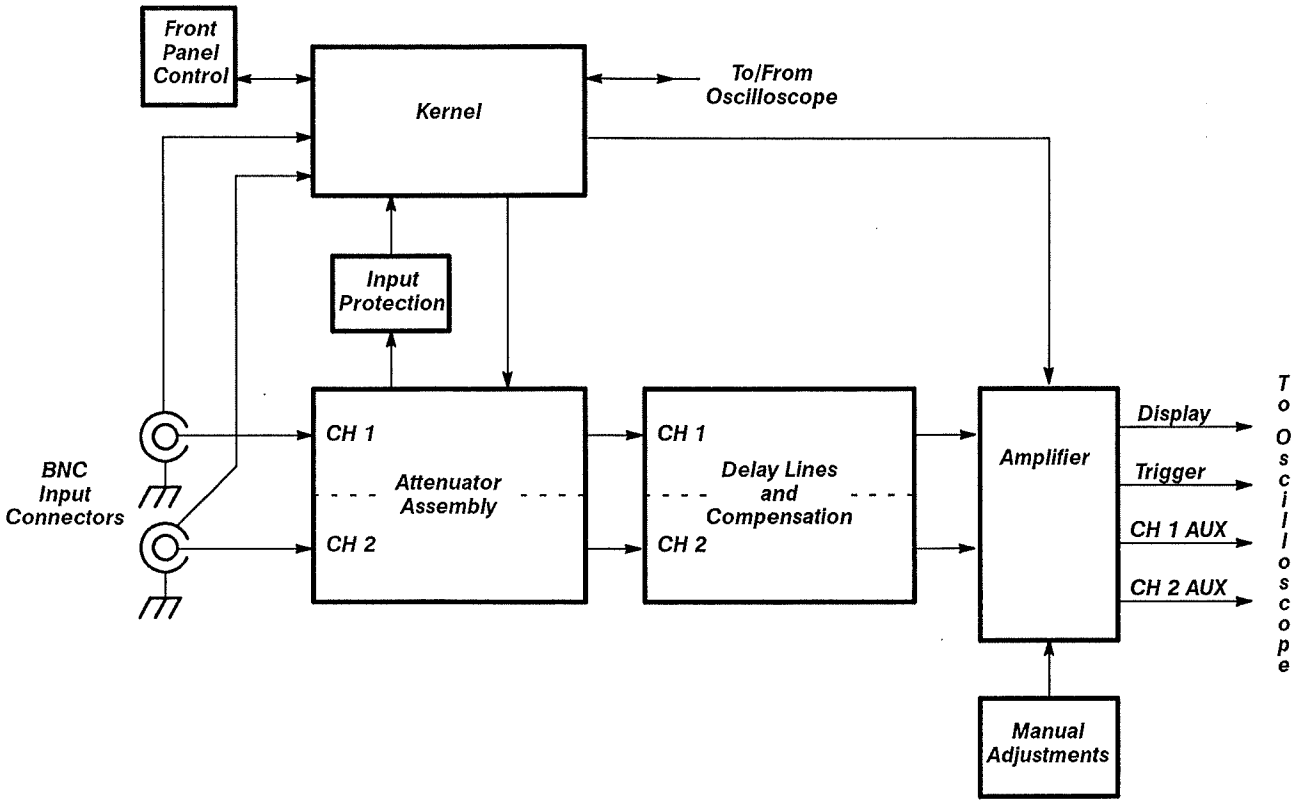

Figure 4-1 — 11A72 Amplifier System Functional Block Diagram

Attenuator Assembly Block

The Attenuator assembly contains two attenuators (one per channel) that have the following main functions:

- The attenuators attenuate the input signal
- To select AC or DC coupling mode

Input Protection Block

The Input Protection block protects the amplifier from power levels in excess of 0.5 Watts at the channel input.

Delay Lines and Compensation Block

The Delay line and Compensation block contains two delay lines (one per channel) and a compensation circuit. The delay lines delay the input signal before it reaches the amplifier. The compensation circuit compensates for losses to the input signal due to the attenuators and delay lines.

Amplifier Block

The Amplifier block provides gain switching to the input signals. The amplifier block also produces four output signals: a display signal, a trigger signal, and the CH 1 and CH 2 auxiliary signals. Each of these signals can be independently inverted or switched off.

Front Panel Control Block

The Front Panel Control block provides information on the status of the front panel buttons to the Kernel block.

Kernel Block

The Kernel block has the following major functions:

- to monitor the front panel buttons and probe information
- to interpret commands from the oscilloscope and then set the appropriate signal path configuration
- to manage the amplifier diagnostics

Manual Adjustments Block

The Manual Adjustment block contains the internal adjustments of the amplifier. The low and high frequency response of the amplifier can be set with the manual adjustments.

Typical Signal Processing Cycle

The following sequence is a brief overview of how the amplifier acquires and processes a signal from the input connectors:

1. Analog input signals are connected to the BNC input connectors.
2. The attenuator assembly receives the input signal from the input connectors, set the input coupling mode (AC, DC, or Off), and provide attenuation.
3. The Delay Line and Compensation block delays the signal and compensates for frequency response effects due to the attenuators, delay lines, and amplifiers.
4. The Kernel block generates an offset voltage and applies it to the Amplifier block.
5. The Amplifier block receives the offset voltage from the Kernel block, and the signal from the Delay Line and Compensation block. The Amplifier block subtracts the offset voltage from the delayed and compensated signal, and then amplifies the difference.
6. The Amplifier block then replicates this difference signal to four independently buffered signals: display, trigger, and CH 1 and CH 2 auxiliary.
7. The Kernel block provides Normal/Invert control signals to the amplifier display and trigger paths, and on/off control to all four amplifier signal paths.
8. The Amplifier block uses the control signals from the Kernel block to convert each of these signals into differential signals.
9. The Amplifier block either transmits or interrupts the flow of these four differential signals to the oscilloscope, according to the state of their associated on/off control signals.

Detailed Block Diagram Descriptions

This section describes and illustrates the 11A72 Amplifier block diagram (see Figure 4-2).

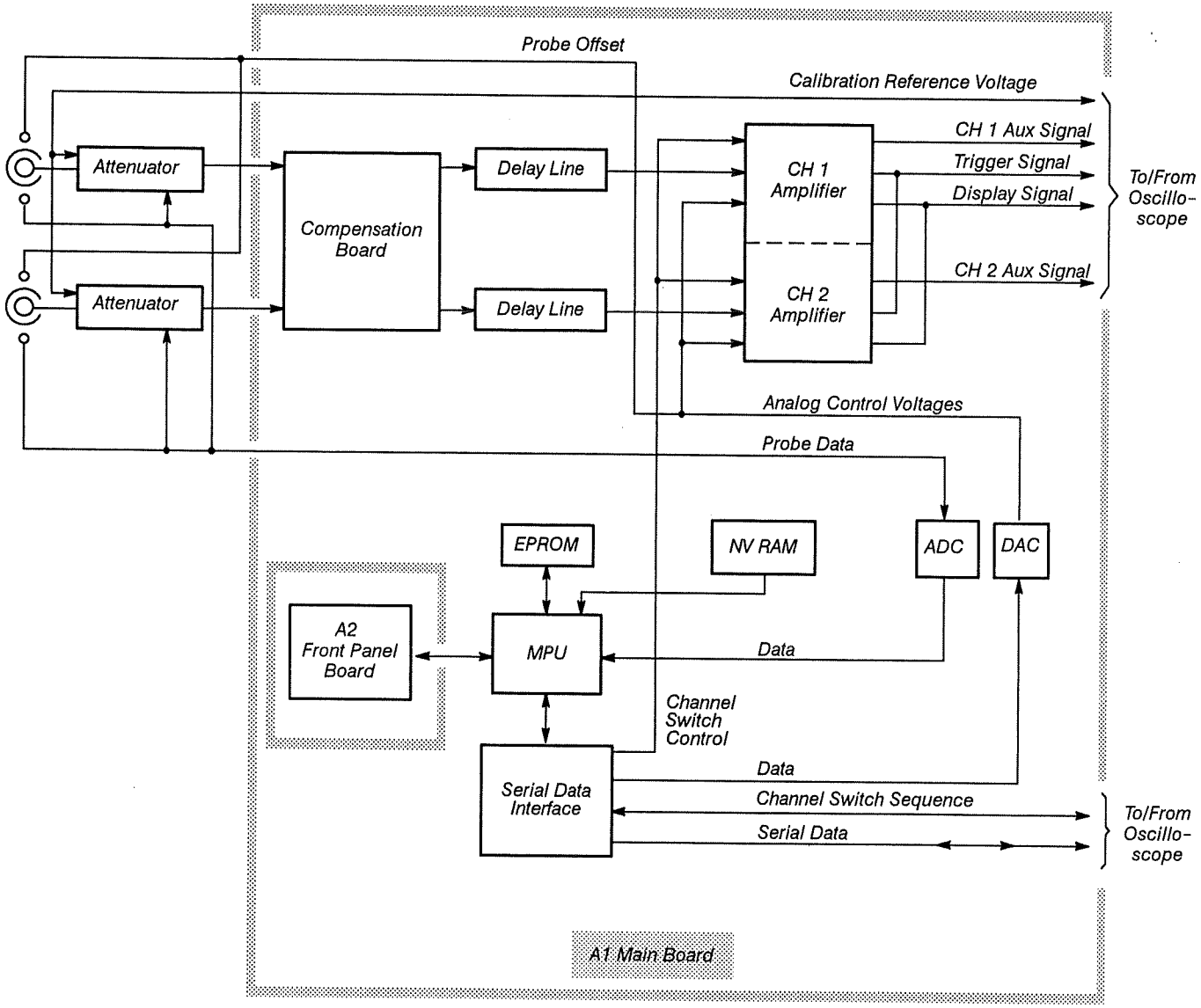

***Figure 4-2** — 11A72 Amplifier Detailed Block Diagram*

Attenuators

The attenuators are attached to the A1 Main board, and provides the following main functions:

- attenuation
- input coupling mode
- calibration reference signal

Attenuation—to the input signal is provided by connecting three cascaded relays to the attenuator. These relays can be combined to produce six different attenuation factors.

The input coupling mode—is set using one relay on the attenuator. The input coupling mode can be set to AC, DC, or off.

A calibration reference signal—is connected to the attenuator during calibration and Self-Tests. During this operation, the input connector is disconnected from the attenuator.

A1 Main Board

The A1 Main board consists of:

- compensation circuitry
- delay lines
- amplifiers
- Microprocessor Unit (MPU)
- EPROM IC
- NV RAM IC
- Serial Data Interface (SDI)
- Housekeeper IC
- Analog-to-Digital (ADC), Digital-to-Analog (DAC) converter

The compensation circuitry—compensates the input signal for significant conductor losses (these losses vary depending on the frequency). The most significant loss is due to the skin effect in the relays. In order for the signal to maintain a flat frequency response, some compensation is necessary.

The delay lines—delay the signal; increasing the propagation time from the input to the output of the amplifier.

The amplifiers—amplify the difference between the input signal and the DC offset voltage by 5X.

The MPU—receives setting information from the oscilloscope and then implements these settings in the amplifier.

The EPROM IC—stores the program code. The MPU uses this code to execute its functions.

The NVRAM IC – stores information; such as, the amplifier calibration constants, the amplifier serial number, probe calibration constants, and the ID of the most recent host oscilloscope.

The Serial Data Interface (SDI) IC – manages the ADC, DAC converter and an array of sample and hold circuits to create eight analog control voltages. The SDI IC performs these functions on commands from the MPU. The MPU also stores the channel switching sequence in the SDI IC.

The SDI IC contains a receiver and transmitter for serial communications between the amplifier and oscilloscope. The SDI IC converts eight-bit data bytes from the MPU into a serial data signal. This signal is then sent to the oscilloscope. Conversely, the SDI IC converts the serial data from the oscilloscope into eight-bit data bytes for the MPU to read.

The ADC – reads the analog probe data voltages.

The DAC – generates analog control voltages under control of the SDI IC.

A2 Front Panel Board

The A2 Front Panel board contains two LEDs and two push buttons. The oscilloscope's software will turn on an LED when its corresponding push button is pressed.

Replaceable Parts

This section contains a list of the components that are replaceable for the 11A72 Two-Channel Amplifier. As described below, use this list to identify and order replacement parts.

Parts Ordering Information

Replacement parts are available from or through your local Tektronix, Inc. service center or representative.

Changes to Tektronix instruments are sometimes made to accommodate improved components as they be come available and to give you the benefit of the latest circuit improvements. Therefore, when ordering parts, it is important to include the following information in your order:

- Part Number
- Instrument Type or Model Number
- Instrument Serial Number
- Instrument Modification Number, if applicable

If a part you order has been replaced with a different or improved part, your local Tektronix service center or representative will contact you concerning any change in the part number.

Change information, if any, is located at the rear of this manual.

Module Replacement

The 11A72 Two-Channel Amplifier is serviced by module replacement so there are three options you should consider:

- **Module Exchange.** In some cases you may exchange your module for a remanufactured module. These modules cost significantly less than new modules and meet the same factory specifications. For more information about the module exchange program, call 1 800 TEKWIDE, extension BV 5799.
- **Module Repair.** You may ship your module to us for repair, after which we will return it to you.
- **New Modules.** You may purchase new replacement modules in the same way as other replacement parts.

Using the Replaceable Parts List

The tabular information in the Replaceable Parts List is arranged for quick retrieval. Understanding the structure and features of the list will help you find the all the information you need for ordering replacement parts.

Item Names

In the Replaceable Parts List, an Item Name is separated from the description by a colon (:). Because of space limitations, an Item Name may sometimes appear as incomplete. For further Item Name identification, U.S. Federal Cataloging Handbook H6-1 can be used where possible.

Indentation System

This parts list is indented to show the relationship between items. The following example is of the indentation system used in the Description column:

1 2 3 4 5 Name & Description

Assembly and/or Component
Attaching parts for Assembly and/or Component
(END ATTACHING PARTS)
Detail Part of Assembly and/or Component
Attaching parts for Detail Part
(END ATTACHING PARTS)
Parts of Detail Part
Attaching parts for Parts of Detail Part
(END ATTACHING PARTS)

Attaching Parts always appear in the same indentation as the item it mounts, while the detail parts are in dented to the right. Indented items are part of, and included with, the next higher indentation. Attaching parts must be purchased separately, unless otherwise specified.

Abbreviations

Abbreviations conform to American National Standards Institute (ANSI) standard Y1.1

CROSS INDEX - MFR. CODE NUMBER TO MANUFACTURER

Mfr. Code	Manufacturer	Address	City, State, Zip Code
01536	TEXTRON INC CAMCAR DIV SEMS PRODUCTS UNIT	1818 CHRISTINA ST	ROCKFORD IL 61108
22599	AMERACE CORP ESNA DIV	15201 BURBANK BLVD SUITE C	VAN NUYS CA 91411-3532
24931	SPECIALTY CONNECTOR CO INC	2100 EARLYWOOD DR PO BOX 547	FRANKLIN IN 46131
34649	INTEL CORP SALES OFFICE /ST4-2/	3065 BOWERS AVE	SANTA CLARA CA 95051
75915	LITTELFUSE INC SUB TRACOR INC	800 E NORTHWEST HWY	DES PLAINES IL 60016-3049
80009	TEKTRONIX INC	14150 SW KARL BRAUN DR PO BOX 500	BEAVERTON OR 97077-0001
83385	MICRODOT MFG INC GREER-CENTRAL DIV	3221 W BIG BEAVER RD	TROY MI 48098
91260	CONNOR SPRING AND MFG CO A SLOSS AND BRITTAN INC CO	1729 JUNCTION AVE	SAN JOSE CA 95112
92101	SCHULZE MFG	50 INGOLD RD	BURLINGAME CA 94010-2206
93907	TEXTRON INC CAMCAR DIV	600 18TH AVE	ROCKFORD IL 61108-5181
TK1326	NORTHWEST FOURSLIDE INC	18224 SW 100TH CT	TUALATIN OR 97062

Fig. & Index No.	Tektronix Part No.	Serial/Assembly No. Effective	Dscont	Qty	12345 Name & Description	Mfr. Code	Mfr. Part No.
1-1	366-0600-00			2	PUSH BUTTON:0.269 X 0.409,ABS	80009	366-0600-00
-2	366-1058-00			1	KNOB:GRAY,0.625 X 0.255 X 0.485	80009	366-1058-00
					(ATTACHING PARTS)		
-3	214-1095-00			1	PIN,SPRING:0.187 L X 0.094 OD,STL,CD PL	22599	52-022-094-0187
					(END ATTACHING PARTS)		
-4	105-0076-04			1	RELEASE BAR,LCH:PLUG-IN UNIT	80009	105-0076-04
-5	214-1280-00			1	SPRING,HLCPS:0.14 OD X 1.126 L,TWIST LOOP	91260	ORDER BY DESCR
-6	214-1054-00			1	SPRING,FLAT:0.825 X 0.322,SST	TK1326	ORDER BY DESCR
-7	105-0075-00			1	BOLT,LATCH:	80009	105-0075-00
-8	333-3518-00			1	PANEL,FRONT:	80009	333-3518-00
					(ATTACHING PARTS)		
-9	211-0392-00			4	SCREW,MACHINE:4-40 X 0.25,FLH,82 DEG,STL	80009	211-0392-00
					(END ATTACHING PARTS)		
-10	348-0235-00			2	SHLD GSKT,ELEK:FINGER TYPE,4.734 L	92101	ORDER BY DESCR
-11	386-5219-00			1	SUBPANEL,FRONT:	80009	386-5219-00
-12	426-2061-00			1	FR SECT,PLUG-IN:LOWER,ALUMINUM	80009	426-2061-00
					(ATTACHING PARTS)		
-13	211-0392-00			2	SCREW,MACHINE:4-40 X 0.25,FLH,82 DEG,STL	80009	211-0392-00
					(END ATTACHING PARTS)		
-14	334-3540-00			1	MARKER,IDENT:MARKED WARNING	80009	334-3540-00
-15	131-3589-00			2	CONN ASSY,ELEC:FRONT PNL	80009	131-3589-00
					(ATTACHING PARTS)		
-16	211-0413-00			8	SCREW,MACHINE:2-56 X 0.375,FLH,82 DEG,STL	93907	ORDER BY DESCR
					(END ATTACHING PARTS)		
-17	354-0654-01			2	RING,CONN:BNC	80009	354-0654-01
-18	174-0205-00			2	CABLE ASSY,RF:50 OHM COAX,2.6 L	80009	174-0205-00
-19	119-2397-01			2	ATTENUATOR ASSY:5 STAGE PROGRAMMABLE	80009	119-2397-01
					(ATTACHING PARTS)		
-20	211-0409-00			4	SCR,ASSEM WSHR:4-40 X 0.312,PNH,STL	93907	ORDER BY DESCR
					(END ATTACHING PARTS)		
-21	670-9336-00			1	CIRCUIT BD ASSY:FRONT PANEL	80009	670-9336-00
					(SEE A2)		
					(ATTACHING PARTS)		
-22	211-0413-00			2	SCREW,MACHINE:2-56 X 0.375,FLH,82 DEG,STL	93907	ORDER BY DESCR
					(END ATTACHING PARTS)		
-23	174-0159-00			1	CA ASSY,SP,ELEC:6,26 AWG,3.0 L,RIBBON	80009	174-0159-00
-24	220-0022-00			4	NUT BLK:0.4 X 0.25 X 0.33,4-40 THRU,NI SIL	80009	220-0022-00
					(ATTACHING PARTS)		
-25	211-0409-00			4	SCR,ASSEM WSHR:4-40 X 0.312,PNH,STL	93907	ORDER BY DESCR
					(END ATTACHING PARTS)		
-26	337-1064-11			2	SHIELD,ELEC:PLUG-IN SIDE	80009	337-1064-11
-27	214-1061-00			1	CONTACT,ELEC:GROUNDING,CU BE	80009	214-1061-00
-28	334-3438-00			1	MARKER,IDENT:MARKED TURN OFF POWER	80009	334-3438-00
-29	426-2060-00			1	FR SECT,PLUG-IN:UPPER,ALUMINUMN	80009	426-2060-00
					(ATTACHING PARTS)		
-30	211-0392-00			2	SCREW,MACHINE:4-40 X 0.25,FLH,82 DEG,STL	80009	211-0392-00
					(END ATTACHING PARTS)		
-31	671-0245-00			1	CIRCUIT BD ASSY:MAIN	80009	671-0245-00
					(SEE A1)		
					(ATTACHING PARTS)		
-32	211-0409-00			4	SCR,ASSEM WSHR:4-40 X 0.312,PNH,STL	93907	ORDER BY DESCR
					(END ATTACHING PARTS)		
					MAIN CIRCUIT BD ASSEMBLY INCLUDES:		
-33	159-0235-00			2	.FUSE,WIRE LEAD:0.75A,125V,FAST	80009	159-0235-00
-34	159-0253-00			2	.FUSE,CARTRIDGE:0.250A,125V,FAST,SUBMIN	75915	251.250 T & R T1
-35	160-4845-00			1	.MICROCKT,DGTL:HMOS,16384 X 8 EPROM,PRGM	80009	160-4845-00
-36	156-2671-00			1	.MICROCKT,DGTL:CMOS,2048 X 8 SRAM MDL W/	80009	156-2671-00
					.INTEGRAL BATTERY DS1220,24		
-37	156-1684-01			1	.MICROCKT,DGTL:MICROCOMPUTER,8 BIT	34649	P8031AH
-38	156-2625-00			1	.MICROCKT,DGTL:NMOS,CUSTOM,SENESCHAL	80009	156-2625-00
-39	119-3318-00			1	.HYPCON ASSEMBLY:PACKAGED ASSY	80009	119-3318-00
					(ATTACHING PARTS)		
-40	211-0332-00			4	.SCR,ASSEM WSHR:4-40 X 0.5,PNH,STL,T9	01536	ORDER BY DESCR
					(END ATTACHING PARTS)		
-41	165-0021-00			1	.MICROCKT,HYBRID:PREAMPLIFIER,S0021	80009	165-0021-00
-42	214-4083-00			1	.HT SK,BLOCK:ALUMINUM	80009	214-4083-00
-43	343-1403-00			1	.RTNR,DELAY LINE:POLYCARBONATE	80009	343-1403-00
					(ATTACHING PARTS)		

Fig. & Index No.	Tektronix Part No.	Serial/Assembly No. Effective	Dscont	Qty	12345 Name & Description	Mfr. Code	Mfr. Part No.
1-44	211-0720-00			1	.SCR,ASSEM WSHR:6-32 X 0.50,PNH,STL,TORX,T15 (END ATTACHING PARTS)	01536	829-09487
-45	407-3662-00			1	.BRACKET,HEAT SK:ALUMINUM (ATTACHING PARTS)	80009	407-3662-00
-46	211-0409-00			6	.SCR,ASSEM WSHR:4-40 X 0.312,PNH,STL (END ATTACHING PARTS)	93907	ORDER BY DESCR
-47	386-5296-00			1	PANEL,REAR: (ATTACHING PARTS)	80009	386-5296-00
-48	213-0904-00			4	SCREW,TPG,TR:6-32 X 0.5,PNH,STL (END ATTACHING PARTS)	83385	ORDER BY DESCR
					OPTION 01		
-49	103-0269-00			2	ADAPTER,CONN:SMA TO PELTOLA	24931	39JR198-1
-50	354-0700-00			2	RING,ALIGNMENT:	80009	354-0700-00
-51	407-3453-02			2	BRACKET,CONN:POLYCARBONATE	80009	407-3453-02
					STANDARD ACCESSORIES		
	070-7255-00			1	MANUAL,TECH:USERS REF,11A72	80009	070-7255-00
	070-7257-00			1	MANUAL,TECH:SEVICE REF,11A72	80009	070-7257-00

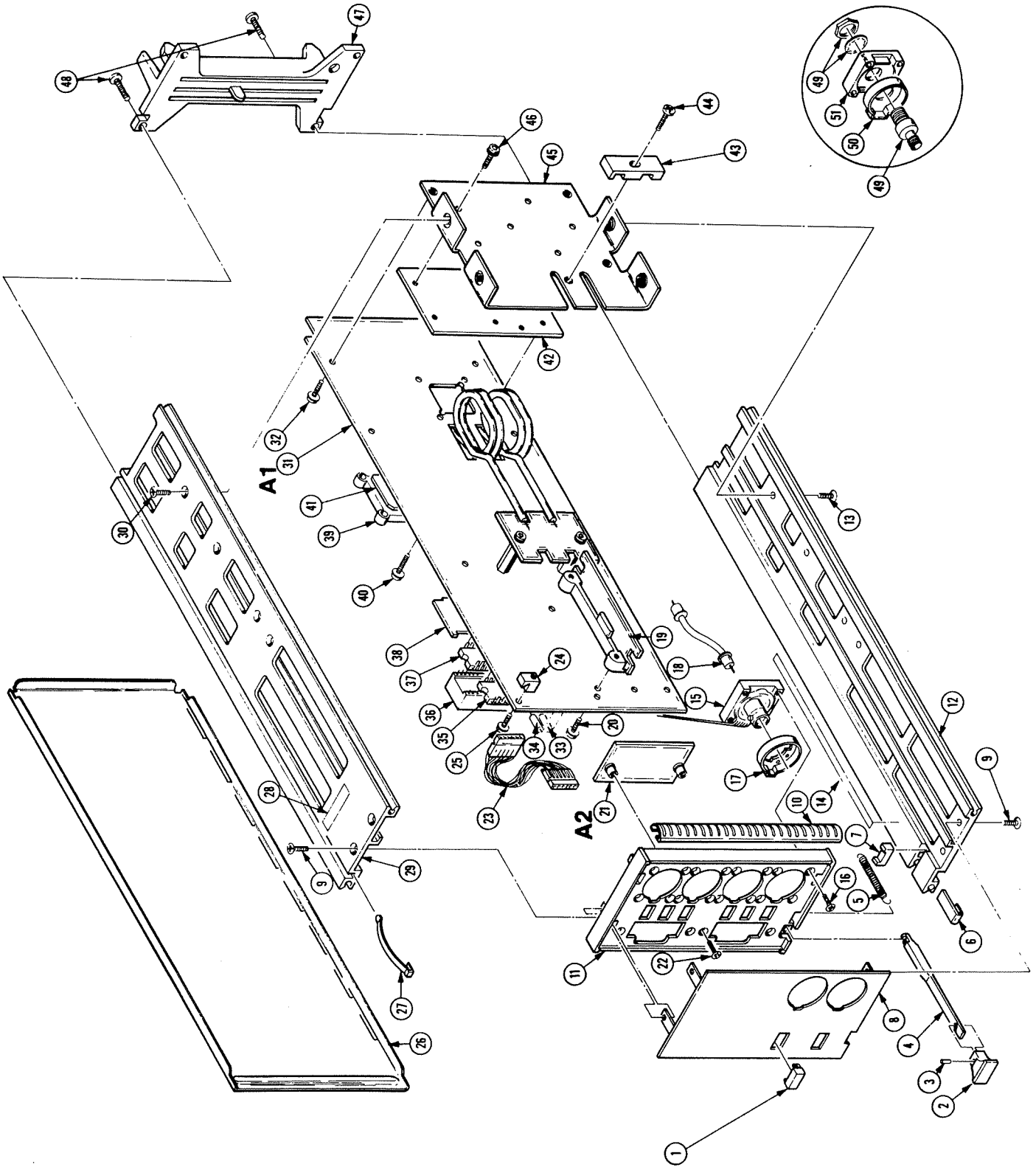

FIG. 1 EXPLODED
11A72 Service Reference Manual

SEND TO: TEKTRONIX, INC.
LAB INSTRUMENTS MARKETING SUPPORT
P.O. BOX 500, DEL STA 39-327
BEAVERTON, OREGON 97077

11000-SERIES OSCILLOSCOPE PROBLEM REPORT

A INSTRUMENT CONFIGURATION:

Instrument	Section	ROM (Version)	ID # (Serial Number)

Option Information

B
COMPANY NAME: _____
USER: _____
ADDRESS: _____
CITY: _____ STATE: _____ ZIP: _____
PHONE: _____ EXTENSION: _____

SUBMITTED BY: _____ DATE: _____

C
REASON FOR REPORT
☐ Hardware/Mechanical Problem
☐ Software/Firmware Problem
☐ Documentation Problem
☐ Suggested Enhancement

IS THE PROBLEM REPRODUCIBLE?
☐ Yes ☐ No ☐ Intermittent

D SYSTEM DESCRIPTION: (Hardware, software, firmware and host related to the problem)

E DESCRIPTION OF PROBLEM:

LIST ENCLOSURES:

Tektronix®
COMMITTED TO EXCELLENCE

Instructions For Completing The Problem Report

I. Please type or print clearly. Use a separate Problem Report (PR) for each problem.

II. SECTION A

Fill in the instrument configuration table, including all plug-in units, modules, and probes installed in the oscilloscope. The information can be found in one of the menus under the UTILITY major menu.

Instrument: Write the instrument name (e.g., 11301, 11401, 11A32, etc.).

Section (Microprocessor Subsystem): If the instrument has more than one section write the section name. For plug-ins, write in which mainframe slot they are located (e.g., left, center, right).

ROM (Version): Write the rom version number for each instrument and section. Instruments with more than one section will have more than one version number.

ID# (Serial Number): Write the serial number for each instrument. At the factory the ID number is programmed to be the instrument's serial number. If this value has been changed, please write the serial number physically attached to the instrument (mainframes: front panel, plug-in units: top rail).

III. SECTION B

Use the complete company mailing address. Include the name and phone number of the person reporting the error. Also, be sure to fill in the name of the person submitting the PR.

IV. SECTION C

Check the reason for the report and whether the problem is reproducible. We cannot fix a problem when we cannot reproduce the problem condition.

V. SECTION D

Give a complete description of the system configuration on which the problem occurred. Include related peripherals, interfaces, options, special switch and/or strap settings and operating system.

VI. SECTION E

Describe the problem completely. Include any information which might help in evaluating the error with the PR. If you have determined a procedure to avoid the error condition, please include this procedure. If this problem prevents you from accomplishing any useful work with the product, please state this fact. Be sure to include with the PR any information (programs, listings, hard copies, etc.) which will help us duplicate your problem.

VII. SECTION F

This section is for use by Tektronix Lab Instruments Marketing Support personnel. DO NOT WRITE IN THIS SPACE.

VIII. Mail **all** copies of the Problem Report to:

TEKTRONIX, INC.
LAB INSTRUMENTS MARKETING SUPPORT
P.O. BOX 500, DEL STA 39-327
BEAVERTON, OREGON 97077

INTERNAL USE ONLY
(DO NOT WRITE BELOW THIS LINE)

	DATE RECEIVED .....
	IR # .....

F

PR LOG

Tektronix®
COMMITTED TO EXCELLENCE

MANUAL CHANGE INFORMATION

Date: 31-July-89 Change Reference: M70284 Rev-1
Manual Part No.: 070-7257-00
Product: 11A72 Service Reference Product Group: 47

DESCRIPTION

These changes are effective for serial numbers B030280.

REPLACEABLE PART CHANGES

CHANGE TO:

Fig. & Index No.	Tektronix Part No.	Name & Description
5-31	671-0245-02	CKT BD ASSY:MAIN (SEE A1)
5-35	160-4845-03	MICROCKT, DGTL:HMOS EPROM, V 1.9
5-41	165-0021-01	MICROCKT, HYBRID:PREAMPLIFIER

Tektronix
COMMITTED TO EXCELLENCE

MANUAL CHANGE INFORMATION

Date: 30-Aug-89 Change Reference: M70649

Product: 11A72 Service Reference

Manual Part No.: 070-7257-00

Product Group: 47

DESCRIPTION

These changes are effective at serial number B040457

REPLACEABLE PARTS CHANGES

CHANGE TO:

Fig. 1-31	671-0245-03	CKT BOARD ASSY: Main
Fig. 1-35	160-4845-04	MICROCKT,DGTL: EPROM,VER. 2.0

11A72